KYOCERA

FS-C5300DN
FS-C5200DN
FS-C5100DN

SERVICE MANUAL

Published in December 2009
842HN112
2HNSM062
Rev.2

CAUTION

RISK OF EXPLOSION IF BATTERY IS REPLACED BY AN INCORRECT TYPE. DISPOSE OF USED BATTERIES ACCORDING TO THE INSTRUCTIONS.

It may be illegal to dispose of this battery into the municipal waste stream. Check with your local solid waste officials for details in your area for proper disposal.

ATTENTION

IL Y A UN RISQUE D'EXPLOSION SI LA BATTERIE EST REMPLACEE PAR UN MODELE DE TYPE INCORRECT. METTRE AU REBUT LES BATTERIES UTILISEES SELON LES INSTRUCTIONS DONNEES.

Il peut être illégal de jeter les batteries dans des eaux d'égout municipales. Vérifiez avec les fonctionnaires municipaux de votre région pour les détails concernant des déchets solides et une mise au rebut appropriée.

Revision history

Revision	Date	Replaced pages	Remarks
1	March 5, 2009	1-2-2, 1-2-3, 1-2-4, 1-3-1, 1-3-2, 1-3-3, 1-3-4, 1-3-5, 1-3-6, 1-3-7, 1-3-9, 1-3-10, 1-3-14, 1-3-15, 1-3-16, 1-3-17, 1-3-18, 1-4-3, 1-4-4, 1-4-8, 1-4-9, 1-4-10, 1-4-11 1-4-12, 1-4-13, 1-4-14, 1-4-15, 1-4-16, 1-4-17, 1-4-18, 1-4-19, 1-4-20, 1-5-3, 1-5-32, 1-5-34, 1-5-41, 1-6-1,1-6-2, 1-6-6, 2-2-3, 2-2-4, 2-4-2, 2-4-2	-
2	December 11, 2009	1-4-19, 1-4-20, 1-5-2	-

This page is intentionally left blank.

Safety precautions

This booklet provides safety warnings and precautions for our service personnel to ensure the safety of their customers, their machines as well as themselves during maintenance activities. Service personnel are advised to read this booklet carefully to familiarize themselves with the warnings and precautions described here before engaging in maintenance activities.

Safety warnings and precautions

Various symbols are used to protect our service personnel and customers from physical danger and to prevent damage to their property. These symbols are described below:

⚠**DANGER:** High risk of serious bodily injury or death may result from insufficient attention to or incorrect compliance with warning messages using this symbol.

⚠**WARNING:** Serious bodily injury or death may result from insufficient attention to or incorrect compliance with warning messages using this symbol.

⚠**CAUTION:** Bodily injury or damage to property may result from insufficient attention to or incorrect compliance with warning messages using this symbol.

Symbols

The triangle (△) symbol indicates a warning including danger and caution. The specific point of attention is shown inside the symbol.

General warning.

Warning of risk of electric shock.

Warning of high temperature.

⃠ indicates a prohibited action. The specific prohibition is shown inside the symbol.

General prohibited action.

Disassembly prohibited.

● indicates that action is required. The specific action required is shown inside the symbol.

General action required.

Remove the power plug from the wall outlet.

Always ground the copier.

1.Installation Precautions

WARNING

- Do not use a power supply with a voltage other than that specified. Avoid multiple connections to one outlet: they may cause fire or electric shock. When using an extension cable, always check that it is adequate for the rated current. .....
- Connect the ground wire to a suitable grounding point. Not grounding the copier may cause fire or electric shock. Connecting the earth wire to an object not approved for the purpose may cause explosion or electric shock. Never connect the ground cable to any of the following: gas pipes, lightning rods, ground cables for telephone lines and water pipes or faucets not approved by the proper authorities. .....

CAUTION:

- Do not place the copier on an infirm or angled surface: the copier may tip over, causing injury. .....
- Do not install the copier in a humid or dusty place. This may cause fire or electric shock. .....
- Do not install the copier near a radiator, heater, other heat source or near flammable material.

  This may cause fire. .....
- Allow sufficient space around the copier to allow the ventilation grills to keep the machine as cool as possible. Insufficient ventilation may cause heat buildup and poor copying performance. .....

- Always handle the machine by the correct locations when moving it. .....
- Always use anti-toppling and locking devices on copiers so equipped. Failure to do this may cause the copier to move unexpectedly or topple, leading to injury. .....
- Avoid inhaling toner or developer excessively. Protect the eyes. If toner or developer is accidentally ingested, drink a lot of water to dilute it in the stomach and obtain medical attention immediately. If it gets into the eyes, rinse immediately with copious amounts of water and obtain medical attention. .....
- Advice customers that they must always follow the safety warnings and precautions in the copier's instruction handbook. .....

2.Precautions for Maintenance

WARNING

- Always remove the power plug from the wall outlet before starting machine disassembly. .....
- Always follow the procedures for maintenance described in the service manual and other related brochures. .....
- Under no circumstances attempt to bypass or disable safety features including safety mechanisms and protective circuits. .....
- Always use parts having the correct specifications. .....
- Always use the thermostat or thermal fuse specified in the service manual or other related brochure when replacing them. Using a piece of wire, for example, could lead to fire or other serious accident. .....
- When the service manual or other serious brochure specifies a distance or gap for installation of a part, always use the correct scale and measure carefully. .....
- Always check that the copier is correctly connected to an outlet with a ground connection. .....
- Check that the power cable covering is free of damage. Check that the power plug is dust-free. If it is dirty, clean it to remove the risk of fire or electric shock. .....
- Never attempt to disassemble the optical unit in machines using lasers. Leaking laser light may damage eyesight. .....
- Handle the charger sections with care. They are charged to high potentials and may cause electric shock if handled improperly. .....

CAUTION

- Wear safe clothing. If wearing loose clothing or accessories such as ties, make sure they are safely secured so they will not be caught in rotating sections. .....
- Use utmost caution when working on a powered machine. Keep away from chains and belts. .....
- Handle the fixing section with care to avoid burns as it can be extremely hot. .....
- Check that the fixing unit thermistor, heat and press rollers are clean. Dirt on them can cause abnormally high temperatures. .....

- Do not remove the ozone filter, if any, from the copier except for routine replacement. .....
- Do not pull on the AC power cord or connector wires on high-voltage components when removing them; always hold the plug itself. .....
- Do not route the power cable where it may be stood on or trapped. If necessary, protect it with a cable cover or other appropriate item. .....
- Treat the ends of the wire carefully when installing a new charger wire to avoid electric leaks. .....
- Remove toner completely from electronic components. .....
- Run wire harnesses carefully so that wires will not be trapped or damaged. .....
- After maintenance, always check that all the parts, screws, connectors and wires that were removed, have been refitted correctly. Special attention should be paid to any forgotten connector, trapped wire and missing screws. .....
- Check that all the caution labels that should be present on the machine according to the instruction handbook are clean and not peeling. Replace with new ones if necessary. .....
- Handle greases and solvents with care by following the instructions below: .....
  - · Use only a small amount of solvent at a time, being careful not to spill. Wipe spills off completely.
  - · Ventilate the room well while using grease or solvents.
  - · Allow applied solvents to evaporate completely before refitting the covers or turning the power switch on.
  - · Always wash hands afterwards.
- Never dispose of toner or toner bottles in fire. Toner may cause sparks when exposed directly to fire in a furnace, etc. .....
- Should smoke be seen coming from the copier, remove the power plug from the wall outlet immediately. .....

3.Miscellaneous

WARNING

- Never attempt to heat the drum or expose it to any organic solvents such as alcohol, other than the specified refiner; it may generate toxic gas. .....

This page is intentionally left blank.

CONTENTS

1-1 Specifications

1-1-1 Specifications 1-1-1
1-1-2 Parts names 1-1-7
(1) Overall 1-1-7
(2) Operation panel 1-1-9
1-1-3 Machine cross section 1-1-10

1-2 Installation

1-2-1 Installation environment 1-2-1
1-2-2 Unpacking 1-2-2
(1) Unpacking 1-2-2
(2) Removing the tape 1-2-4
1-2-3 Installing the expansion memory modules (option) 1-2-5
1-2-4 Installing the memory card (option) 1-2-6
1-2-5 Installing the hard disk (option for 26/28 ppm [500-sheet] model only) 1-2-7

1-3 Maintenance Mode

1-3-1 Maintenance mode 1-3-1
(1) Executing a maintenance item 1-3-1
(2) Service mode 1-3-2
(3) Printing a event log (EVENT LOG) 1-3-13

1-4 Troubleshooting

1-4-1 Paper misfeed detection 1-4-1
(1) Paper misfeed indication 1-4-1
(2) Paper misfeed detection condition 1-4-1
1-4-2 Self-diagnostic function 1-4-2
(1) Self-diagnostic function 1-4-2
(2) Self diagnostic codes 1-4-3
1-4-3 Image formation problems 1-4-21
(1) No image appears (entirely white) 1-4-22
(2) No image appears (entirely black) 1-4-23
(3) A specific color is printed solid. 1-4-23
(4) The back side gets dirty. 1-4-23
(5) Image is too light. 1-4-24
(6) The background is colored. 1-4-24
(7) White streaks are printed vertically. 1-4-25
(8) Black streaks are printed vertically. 1-4-25
(9) Streaks are printed horizontally. 1-4-25
(10) Spots are printed. 1-4-25
(11) The leading edge of image begins to print too early or too late. 1-4-26
(12) Paper is wrinkled. 1-4-26
(13) Offset occurs. 1-4-26
(14) Part of image is missing. 1-4-26
(15) Fusing is loose. 1-4-27
(16) Colors are printed offset to each other. 1-4-27
1-4-4 Electric problems 1-4-28
1-4-5 Mechanical problems 1-4-31

1-5 Assembly and Disassembly

1-5-1 Precautions for assembly and disassembly 1-5-1
(1) Precautions 1-5-1
(2) Drum 1-5-1
(3) Toner container 1-5-1
(4) How to tell a genuine Kyocera Mita toner container 1-5-2
1-5-2 Outer covers 1-5-3
(1) Detaching and refitting the left rear cover, left upper cover and left front cover 1-5-3
(2) Detaching and refitting the right rear cover, right upper cover and right front cover 1-5-6

1-5-3 Paper feed section 1-5-8
(1) Detaching and refitting the paper feed roller assembly (paper feed roller and pickup roller) 1-5-8
(2) Detaching and refitting the retard roller 1-5-10
(3) Detaching and refitting the MP paper feed roller 1-5-12
1-5-4 Developing section 1-5-13
(1) Detaching and refitting the developing unit 1-5-13
1-5-5 Drum section 1-5-15
(1) Detaching and refitting the drum unit 1-5-15
(2) Detaching and refitting the main charger unit 1-5-16
1-5-6 Transfer/separation section 1-5-17
(1) Detaching and refitting the intermediate transfer unit 1-5-17
(2) Detaching and refitting the transfer roller unit 1-5-20
(3) Detaching and refitting the duplex unit B 1-5-21
1-5-7 Fuser section 1-5-26
(1) Detaching and refitting the fuser unit 1-5-26
1-5-8 PWBs 1-5-27
(1) Detaching and refitting the power source PWB 1-5-27
(2) Detaching and refitting the main PWB 1-5-29
(3) Detaching and refitting the engine PWB 1-5-30
(4) Detaching and refitting the high voltage PWB 1-5-35
1-5-9 Others 1-5-38
(1) Detaching and refitting the laser scanner unit 1-5-38
(2) Detaching and refitting the ozone filter 1-5-40
(3) Direction of installing the principal fan motors 1-5-41

1-6 Firmware

1-6-1 Downloading firmware 1-6-1
(1) Firmware file 1-6-1
(2) Downloading the firmware from the USB memory 1-6-2
(3) Downloading the firmware from the memory card 1-6-4

2-1 Mechanical Construction

2-1-1 Paper feed/conveying section 2-1-1
(1) Cassette paper feed section 2-1-1
(2) MP tray paper feed section 2-1-3
(3) Paper conveying section 2-1-4
2-1-2 Drum section 2-1-6
(1) Drum section 2-1-6
(2) Main charger unit 2-1-8
2-1-3 Expose section 2-1-10
(1) Laser scanner unit 2-1-10
2-1-4 Developing section 2-1-13
2-1-5 Transfer/separation section 2-1-15
2-1-6 Fuser section 2-1-17
2-1-7 Paper exit/feed shift section 2-1-19
2-1-8 Duplex/conveying section 2-1-21

2-2 Electrical Parts Layout

2-2-1 Electrical parts layout 2-2-1
(1) PWBs 2-2-1
(2) Switches and sensors 2-2-3
(3) Motors 2-2-5
(4) Other electrical components 2-2-7

2-3 Operation of the PWBs

2-3-1 Power source PWB 2-3-1
2-3-2 Engine PWB 2-3-2
2-3-3 Drum relay PWB 2-3-11
2-3-4 Paper exit PWB 2-3-14

2-4 Appendixes

2-4-1 Appendixes 2-4-1
(1) Wiring diagram 2-4-1
(2) Repetitive defects gauge 2-4-3
(3) Maintenance parts list 2-4-4

This page is intentionally left blank.

1-1-1 Specifications

26/28 ppm (500-sheet) model

Type	Desktop
Printing method	Electrophotographic four color (CMYK) printing using tandem (4) drum system
Paper weight	Cassette: 60 to 120 g/m^2 MP tray: 60 to 220 g/m^2
Paper types*1	Cassette: Plain, preprinted, bond, recycled, rough, letterhead, color, prepunched, high quality, and custom MP tray: Plain, transparency, preprinted, labels, bond, recycled, vellum, rough, letterhead, color, prepunched, envelope, cardstock, coated, thick, high quality, and custom
Paper sizes	Cassette: A4, B5, A5, Folio, 8 1/2" × 14" (Legal), 8 1/2" × 11" (Letter), Oficio II, Statement, Executive, ISO B5, A6, Envelope C5, 16K, and Custom MP tray: A4, B5, A5, Folio, 8 1/2" × 14" (Legal), 8 1/2" × 11" (Letter), Oficio II, Statement, Executive, A6, B6, ISO B5, Env. Monarch, Envelope #10, Envelope #9, Envelope #6, Envelope DL, Envelope C5, 16K, Hagaki, Oufuku Hagaki, Youkei 2, Youkei 4, and Custom
Printing speeds	Cassette: A4: 26 ppm B5, A5, A6: 28 ppm (After 16 pages the printing speed becomes 14 ppm) Letter: 28 ppm Legal: 22 ppm MP tray: A4: 23 ppm B5, A5, A6: 24 ppm (After 16 pages the printing speed becomes 14 ppm) Letter: 24 ppm Legal: 20 ppm
Duplex printing speed	A4: 26 ppm B5, A5, A6: 28 ppm (After 16 pages the printing speed becomes 14 ppm) Letter: 28 ppm Legal: 11 ppm
First print out time	B/W: 9 seconds or less Color: 10.5 seconds or less (Sleep: 35 seconds or less)
Warm-up time (23×C, 60%RH)	Power on: 36 seconds or less Sleep (within 3 hours): 30 seconds or less
Paper feed source capacity	Cassette: 500 sheets (80 g/m^2) MP tray: 150 sheets (80 g/m^2)
Output tray capacity	Top tray: 250 sheets (80 g/m^2)
Photoconductor	OPC drum (diameter 30 mm)
Printing method	Semiconductor laser (1 beam)
Charging system	Scorotoron plus charging
Developing system	Dual component interactive touch down developing system Toner replenishing: Automatic from the toner container
Transfer system	Primary transfer: Elasticity intermediate transfer belt (DC bias) Secondary transfer: Transfer roller (DC bias)
Separation system	Small diameter separation, discharger brush
Fixing system	Heat fusing with a heat roller and a pressure roller
Charge erasing system	Exposure by eraser lamp (LED)
Cleaning system	Drum: Counter blade
Controller	PowerPC440-667 MHz
Memory	Standard: 256 MB Maximum: 1280 MB

Resolution	600 dpi
Operating systems	Microsoft Windows 2000/XP/Vista, Windows Server 2003 Apple Macintosh OS X
Interface	USB: Hi-Speed USB Network: 10 BASE-T/100 BASE-TX KUIO-LV slot Option: Hard disk
Memory card slot	1 (CompactFlash, 4 GB or less)
Margin	4 mm (left, right, top and bottom)
Operation environment	Temperature: 10 to 32.5°C/50 to 90.5°F Relative humidity: 15 to 80% Altitude 2,500 m (8,202 feet) maximum Illumination 1,500 lux maximum
Dimensions (W × D × H)	345 × 518 × 480 mm 13 5/8 × 20 2/5 × 18 9/10"
Weight	Approx. 29.5 kg (65 lbs)
Power source	120 V, 60 Hz, max. 9.2 A (U.S.A./Canada) 220-240 V, 50 Hz/60 Hz, max. 4.7 A (European countries) Max. Allowable voltage fluctuation: ±10% Max. Allowable frequency fluctuation: ±2%
Power consumption	Maximum 1,233 W or less During printing: 477 W During standby: 79 W During sleep mode: 7 W Power off: 0 W
Operating noise*2	During printing: LpA = 53 dB (A) During standby: LpA = 36 dB (A) During sleep mode: Immeasurably low

*1: When using CUSTOM 1 (to 8), use the MP tray for paper sizes smaller than 105 × 148 mm (4 1/8 × 5 13/16").
The MP tray can be used with paper sizes over 70 × 138 mm (2 3/4 × 5 7/16").
*2: Sound pressure level at bystander position [front] in accordance with EN ISO 7779.

NOTE: These specifications are subject to change without notice.

21/23 ppm (500-sheet) model

Type	Desktop
Printing method	Electrophotographic four color (CMYK) printing using tandem (4) drum system
Paper weight	Cassette: 60 to 120 g/m^2 MP tray: 60 to 220 g/m^2
Paper types*1	Cassette: Plain, preprinted, bond, recycled, rough, letterhead, color, prepunched, high quality, and custom MP tray: Plain, transparency, preprinted, labels, bond, recycled, vellum, rough, letterhead, color, prepunched, envelope, cardstock, coated, thick, high quality, and custom
Paper sizes	Cassette: A4, B5, A5, Folio, 8 1/2" × 14" (Legal), 8 1/2" × 11" (Letter), Oficio II, Statement, Executive, ISO B5, A6, Envelope C5, 16K, and Custom MP tray: A4, B5, A5, Folio, 8 1/2" × 14" (Legal), 8 1/2" × 11" (Letter), Oficio II, Statement, Executive, A6, B6, ISO B5, Env. Monarch, Envelope #10, Envelope #9, Envelope #6, Envelope DL, Envelope C5, 16K, Hagaki, Oufuku Hagaki, Youkei 2, Youkei 4, and Custom
Printing speeds	Cassette: A4: 21 ppm B5, A5, A6: 23 ppm (After 16 pages the printing speed becomes 14 ppm) Letter: 23 ppm Legal: 17 ppm MP tray: A4: 19 ppm B5, A5, A6: 20 ppm (After 16 pages the printing speed becomes 14 ppm) Letter: 20 ppm Legal: 17 ppm
Duplex printing speed	A4: 11 ppm B5, A5, A6: 11 ppm (After 16 pages the printing speed becomes 7 ppm) Letter: 11 ppm Legal: 8 ppm
First print out time	B/W: 10.5 seconds or less Color: 12 seconds or less (Sleep: 35 seconds or less)
Warm-up time (23°C, 60%RH)	Power on: 44 seconds or less Sleep (within 3 hours): 25 seconds or less
Paper feed source capacity	Cassette: 500 sheets (80 g/m^2) MP tray: 150 sheets (80 g/m^2)
Output tray capacity	Top tray: 250 sheets (80 g/m^2)
Photoconductor	OPC drum (diameter 30 mm)
Printing method	Semiconductor laser (1 beam)
Charging system	Scorotoron plus charging
Developing system	Dual component interactive touch down developing system Toner replenishing: Automatic from the toner container
Transfer system	Primary transfer: Elasticity intermediate transfer belt (DC bias) Secondary transfer: Transfer roller (DC bias)
Separation system	Small diameter separation, discharger brush
Fixing system	Heat fusing with a heat roller and a pressure roller
Charge erasing system	Exposure by eraser lamp (LED)
Cleaning system	Drum: Counter blade
Controller	PowerPC440-533 MHz
Memory	Standard: 256 MB Maximum: 1280 MB

Resolution	600 dpi
Operating systems	Microsoft Windows 2000/XP/Vista, Windows Server 2003 Apple Macintosh OS X
Interface	USB: Hi-Speed USB Network: 10 BASE-T/100 BASE-TX KUIO-LV slot
Memory card slot	1 (CompactFlash, 4 GB or less)
Margin	4 mm (left, right, top and bottom)
Operation environment	Temperature: 10 to 32.5°C/50 to 90.5°F Relative humidity: 15 to 80% Altitude 2,500 m (8,202 feet) maximum Illumination 1,500 lux maximum
Dimensions (W × D × H)	345 × 518 × 480 mm 13 5/8 × 20 2/5 × 18 9/10"
Weight	Approx. 29 kg (64 lbs)
Power source	120 V, 60 Hz, max. 9.2 A (U.S.A./Canada) 220-240 V, 50 Hz/60 Hz, max. 4.7 A (European countries) Max. Allowable voltage fluctuation: ±10% Max. Allowable frequency fluctuation: ±2%
Power consumption	Maximum 1,221 W or less During printing: 420 W During standby: 70 W During sleep mode: 7 W Power off: 0 W
Operating noise*2	During printing: LpA = 53 dB (A) During standby: LpA = 36 dB (A) During sleep mode: Immeasurably low

*1: When using CUSTOM 1 (to 8), use the MP tray for paper sizes smaller than 105 × 148 mm (4 1/8 × 5 13/16").
The MP tray can be used with paper sizes over 70 × 138 mm (2 3/4 × 5 7/16").
*2: Sound pressure level at bystander position [front] in accordance with EN ISO 7779.

NOTE: These specifications are subject to change without notice.

21/23 ppm (250-sheet) model

Type	Desktop
Printing method	Electrophotographic four color (CMYK) printing using tandem (4) drum system
Paper weight	Cassette: 60 to 120 g/m^2 MP tray: 60 to 220 g/m^2
Paper types*1	Cassette: Plain, preprinted, bond, recycled, rough, letterhead, color, prepunched, high quality, and custom MP tray: Plain, transparency, preprinted, labels, bond, recycled, vellum, rough, letterhead, color, prepunched, envelope, cardstock, coated, thick, high quality, and custom
Paper sizes	Cassette: A4, B5, A5, Folio, 8 1/2" × 14" (Legal), 8 1/2" × 11" (Letter), Oficio II, Statement, Executive, ISO B5, A6, Envelope C5, 16K, and Custom MP tray: A4, B5, A5, Folio, 8 1/2" × 14" (Legal), 8 1/2" × 11" (Letter), Oficio II, Statement, Executive, A6, B6, ISO B5, Env. Monarch, Envelope #10, Envelope #9, Envelope #6, Envelope DL, Envelope C5, 16K, Hagaki, Oufuku Hagaki, Youkei 2, Youkei 4, and Custom
Printing speeds	Cassette: A4: 21 ppm B5, A5, A6: 23 ppm (After 16 pages the printing speed becomes 14 ppm) Letter: 23 ppm Legal: 17 ppm MP tray: A4: 19 ppm B5, A5, A6: 20 ppm (After 16 pages the printing speed becomes 14 ppm) Letter: 20 ppm Legal: 17 ppm
Duplex printing speed	A4: 11 ppm B5, A5, A6: 11 ppm (After 16 pages the printing speed becomes 7 ppm) Letter: 11 ppm Legal: 8 ppm
First print out time	B/W: 10.5 seconds or less Color: 12 seconds or less (Sleep: 35 seconds or less)
Warm-up time (23°C, 60%RH)	Power on: 44 seconds or less Sleep (within 3 hours): 25 seconds or less
Paper feed source capacity	Cassette: 250 sheets (80 g/m^2) MP tray: 150 sheets (80 g/m^2)
Output tray capacity	Top tray: 250 sheets (80 g/m^2)
Photoconductor	OPC drum (diameter 30 mm)
Printing method	Semiconductor laser (1 beam)
Charging system	Scorotoron plus charging
Developing system	Dual component interactive touch down developing system Toner replenishing: Automatic from the toner container
Transfer system	Primary transfer: Elasticity intermediate transfer belt (DC bias) Secondary transfer: Transfer roller (DC bias)
Separation system	Small diameter separation, discharger brush
Fixing system	Heat fusing with a heat roller and a pressure roller
Charge erasing system	Exposure by eraser lamp (LED)
Cleaning system	Drum: Counter blade
Controller	PowerPC440-533 MHz
Memory	Standard: 256 MB Maximum: 1280 MB

Resolution	600 dpi
Operating systems	Microsoft Windows 2000/XP/Vista, Windows Server 2003 Apple Macintosh OS X
Interface	USB: Hi-Speed USB Network: 10 BASE-T/100 BASE-TX KUIO-LV slot
Memory card slot	1 (CompactFlash, 4 GB or less)
Margin	4 mm (left, right, top and bottom)
Operation environment	Temperature: 10 to 32.5°C/50 to 90.5°F Relative humidity: 15 to 80% Altitude 2,500 m (8,202 feet) maximum Illumination 1,500 lux maximum
Dimensions (W × D × H)	345 × 518 × 455 mm 13 5/8 × 18 1/2 × 17 9/10"
Weight	Approx. 28 kg (61 lbs)
Power source	120 V, 60 Hz, max. 9.2 A (U.S.A./Canada) 220-240 V, 50 Hz/60 Hz, max. 4.7 A (European countries) Max. Allowable voltage fluctuation: ±10% Max. Allowable frequency fluctuation: ±2%
Power consumption	Maximum 1,231 W or less During printing: 405 W During standby: 69 W During sleep Mode: 7 W Power off: 0 W
Operating noise*2	During printing: LpA = 53 dB (A) During standby: LpA = 36 dB (A) During sleep mode: Immeasurably low

1: When using CUSTOM 1 (to 8), use the MP tray for paper sizes smaller than 105 × 148 mm (4 1/8 × 5 13/16").
The MP tray can be used with paper sizes over 70 × 138 mm (2 3/4 × 5 7/16").

*2: Sound pressure level at bystander position [front] in accordance with EN ISO 7779.

NOTE: These specifications are subject to change without notice.

1-1-2 Parts names

(1) Overall

21/23 ppm (500-sheet) model and 26/28 ppm (500-sheet) model

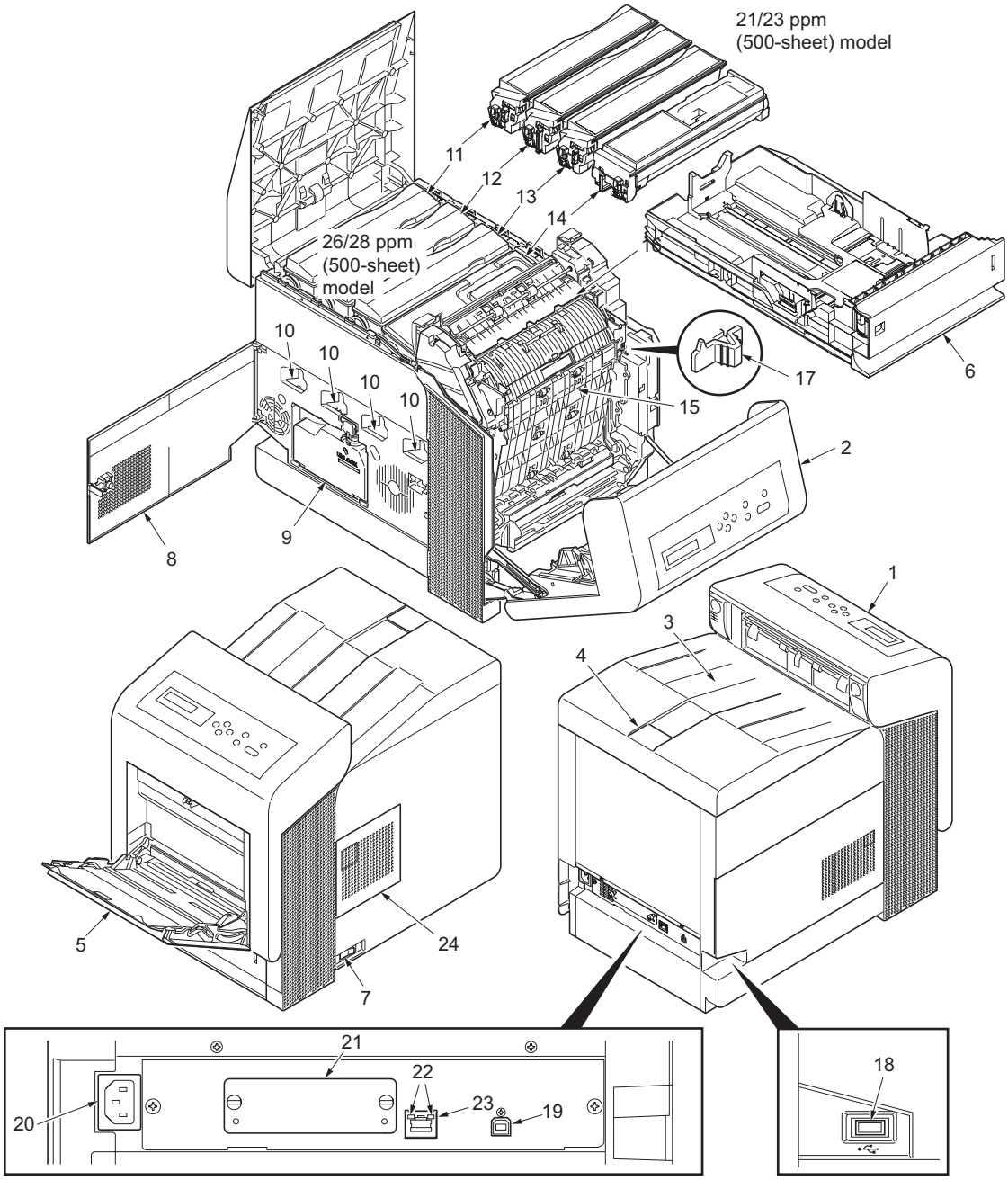

Figure 1-1-1

1. Operation panel
2. Front cover
3. Top cover (Top tray)
4. Paper stopper
5. MP tray
6. Cassette
7. Power switch
8. Left cover
9. Waste toner box
10. Main charger units
11. Toner container M
12. Toner container C
13. Toner container Y
14. Toner container K
15. Duplex unit B
16. Fuser cover A
17. Envelope switch
18. USB memory slot
19. USB interface
20. AC inlet
21. Optional interface slot
22. Network indicators
23. Network interface
24. Right cover

21/23 ppm (250-sheet) model

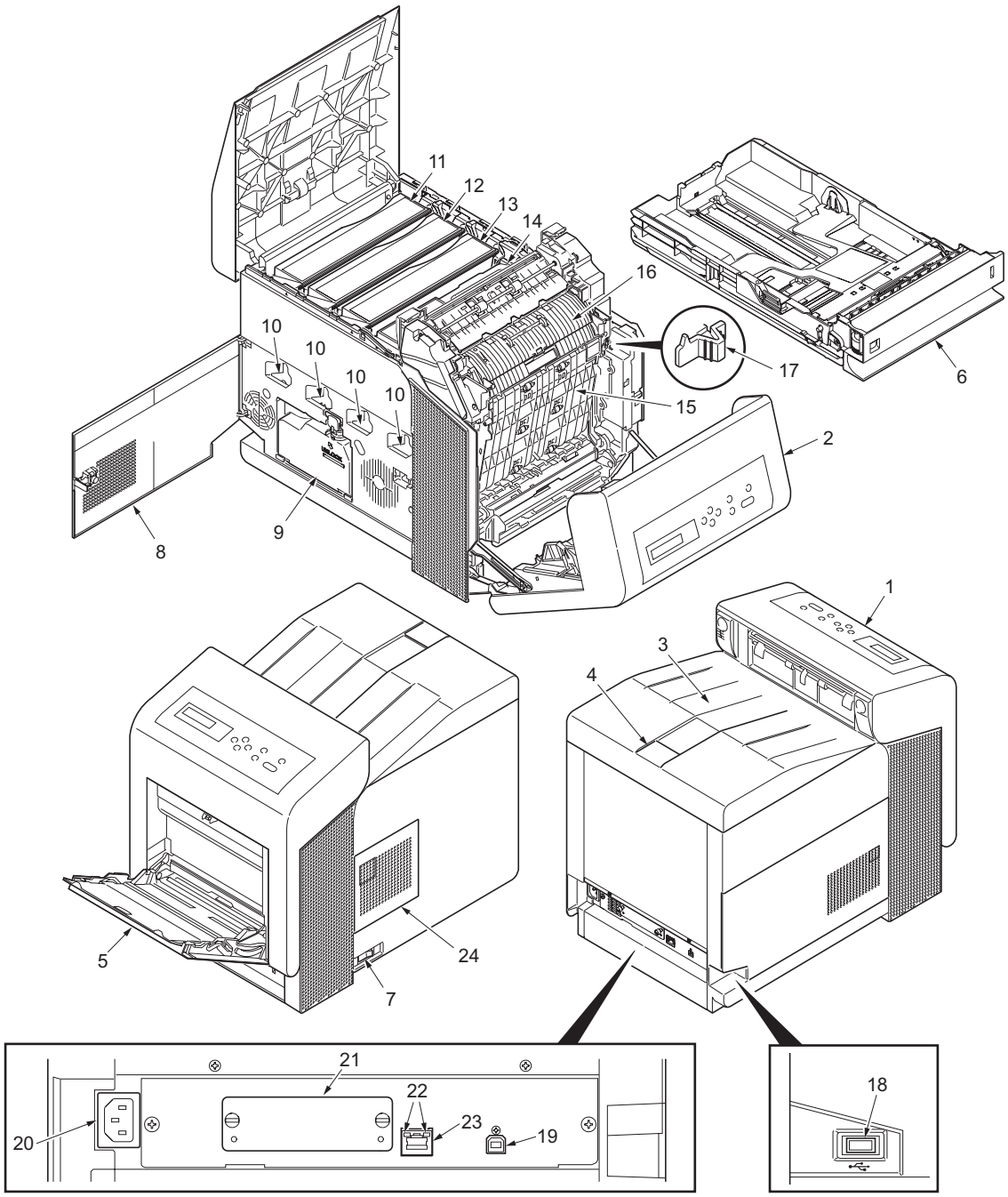

Figure 1-1-2

1. Operation panel
2. Front cover
3. Top cover (Top tray)
4. Paper stopper
5. MP tray
6. Cassette
7. Power switch
8. Left cover
9. Waste toner box
10. Main charger units
11. Toner container M
12. Toner container C
13. Toner container Y
14. Toner container K
15. Duplex unit B
16. Fuser cover A
17. Envelope switch
18. USB memory slot
19. USB interface
20. AC inlet
21. Optional interface slot
22. Network indicators
23. Network interface
24. Right cover

(2) Operation panel

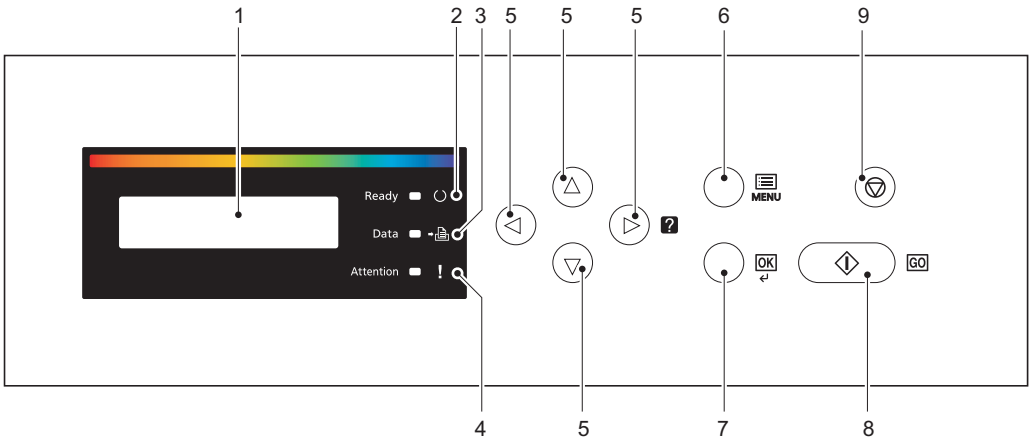

Figure 1-1-3

1. Message display
2. Ready indicator
3. Data indicator
4. Attention indicator
5. Arrow keys
6. MENU key
7. OK key
8. GO key
9. CANCEL key

1-1-3 Machine cross section

21/23 ppm (500-sheet) model and 26/28 ppm (500-sheet) model

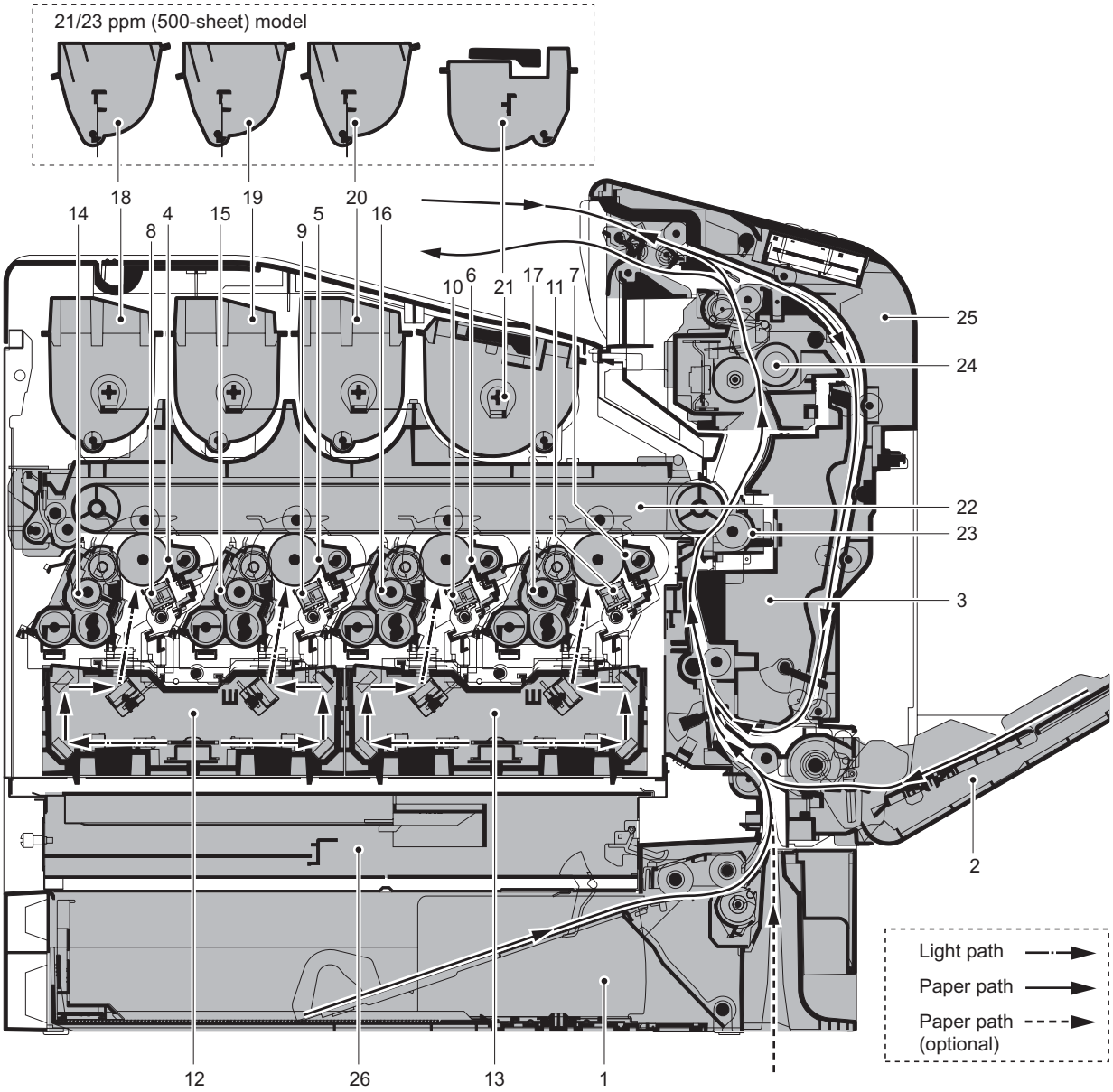

Figure 1-1-4

1. Cassette
2. MP tray
3. Duplex unit B
4. Drum unit M
5. Drum unit C
6. Drum unit Y
7. Drum unit K
8. Main charger unit M
9. Main charger unit C
10. Main charger unit Y
11. Main charger unit K
12. Laser scanner unit MC
13. Laser scanner unit YK
14. Developing unit M
15. Developing unit C
16. Developing unit Y
17. Developing unit K
18. Toner container M
19. Toner container C
20. Toner container Y
21. Toner container K
22. Intermediate transfer unit
23. Transfer roller unit
24. Fuser unit
25. Front cover
26. Controller box

21/23 ppm (250-sheet) model

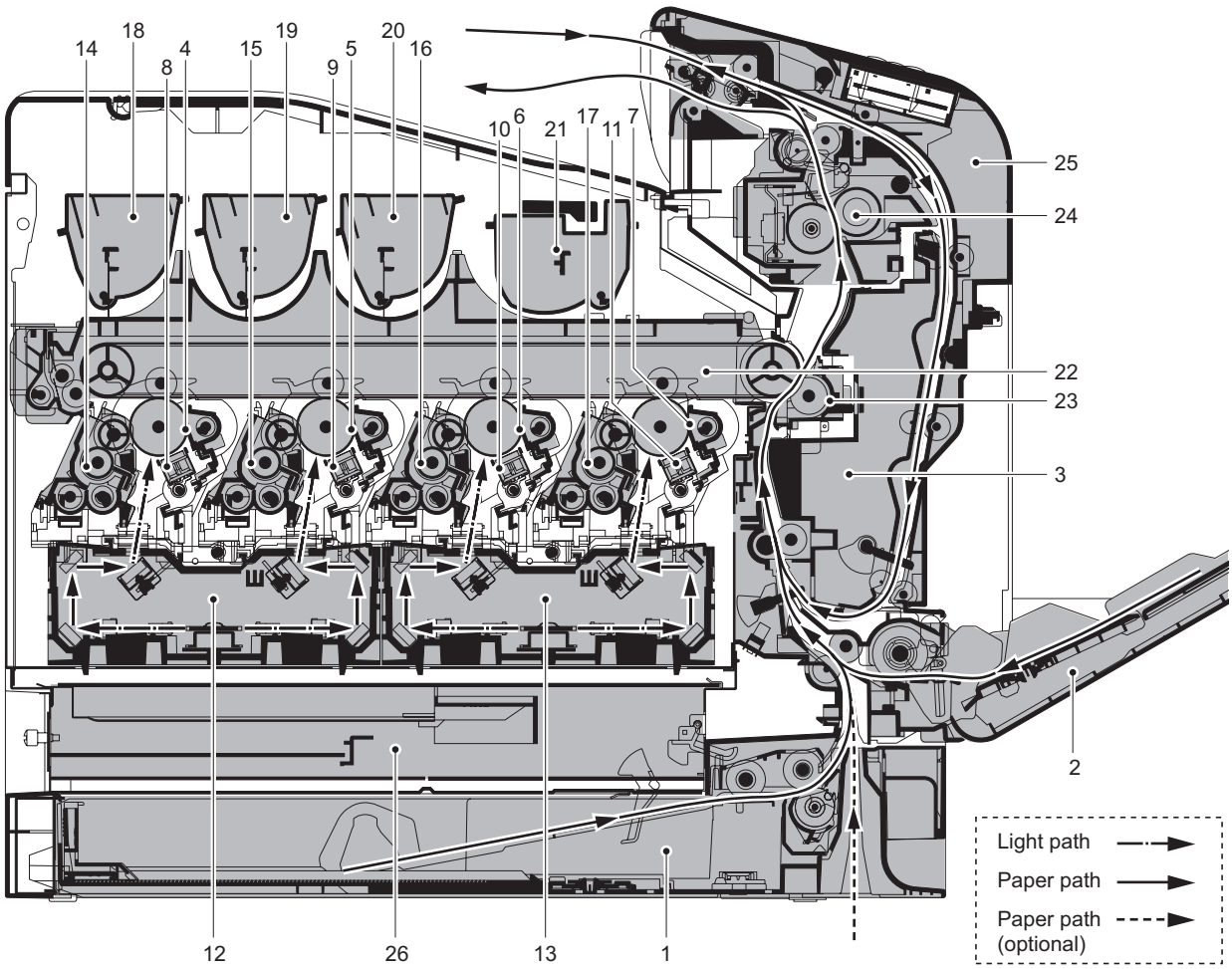

Figure 1-1-5

1. Cassette
2. MP tray
3. Duplex unit B
4. Drum unit M
5. Drum unit C
6. Drum unit Y
7. Drum unit K
8. Main charger unit M
9. Main charger unit C
10. Main charger unit Y
11. Main charger unit K
12. Laser scanner unit MC
13. Laser scanner unit YK
14. Developing unit M
15. Developing unit C
16. Developing unit Y
17. Developing unit K
18. Toner container M
19. Toner container C
20. Toner container Y
21. Toner container K
22. Intermediate transfer unit
23. Transfer roller unit
24. Fuser unit
25. Front cover
26. Controller box

This page is intentionally left blank.

1-2-1 Installation environment

1. Temperature: 10 to 32.5°C/50 to 90.5°F
2. Humidity: 15 to 80%RH
3. Power supply: 120 V AC, 220 - 240 V AC
4. Power source frequency: 50 Hz ±0.3%/60 Hz ±0.3%
5. Installation location
   Avoid direct sunlight or bright lighting. Ensure that the photoconductor will not be exposed to direct sunlight or other strong light when removing paper jams.
   Avoid locations subject to high temperature and high humidity or low temperature and low humidity; an abrupt change in the environmental temperature; and cool or hot, direct air.
   Avoid places subject to dust and vibrations.
   Choose a surface capable of supporting the weight of the machine.
   Place the machine on a level surface (maximum allowance inclination: 1°).
   Avoid air-borne substances that may adversely affect the machine or degrade the photoconductor, such as mercury, acidic of alkaline vapors, inorganic gasses, NOx, SOx gases and chlorine-based organic solvents.
   Select a well-ventilated location.
6. Allow sufficient access for proper operation and maintenance of the machine.

   Machine front: 600 mm/23 5/8"
   Machine rear: 200 mm/7 7/8"
   Machine right: 250 mm/9 13/16"
   Machine left: 400 mm/15 3/4"
   Machine top: 400 mm/15 3/4"

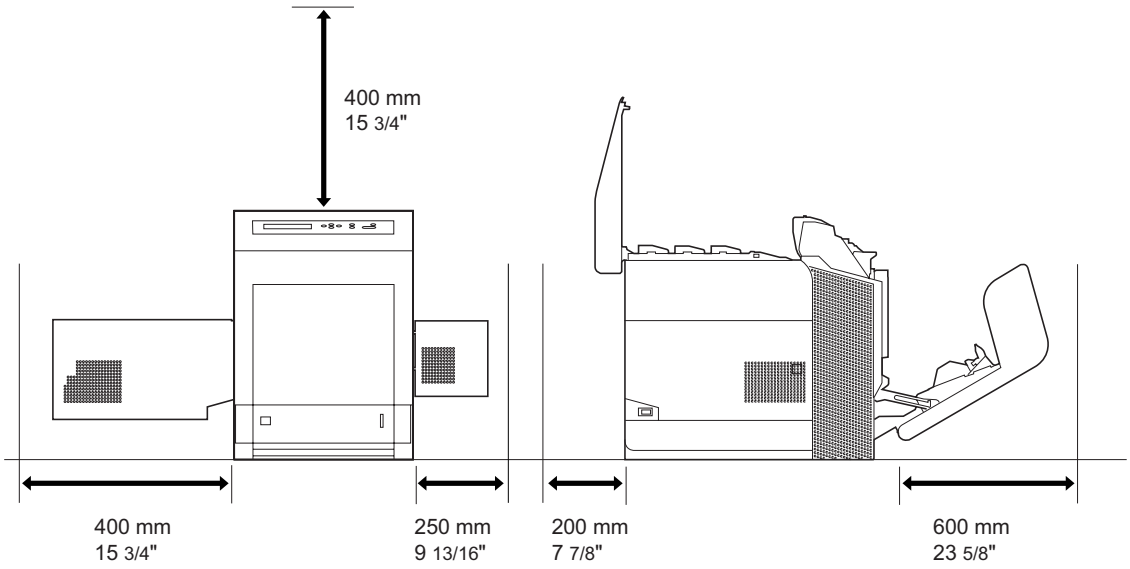

Figure 1-2-1

1-2-2 Unpacking

(1) Unpacking

220-240 V AC model

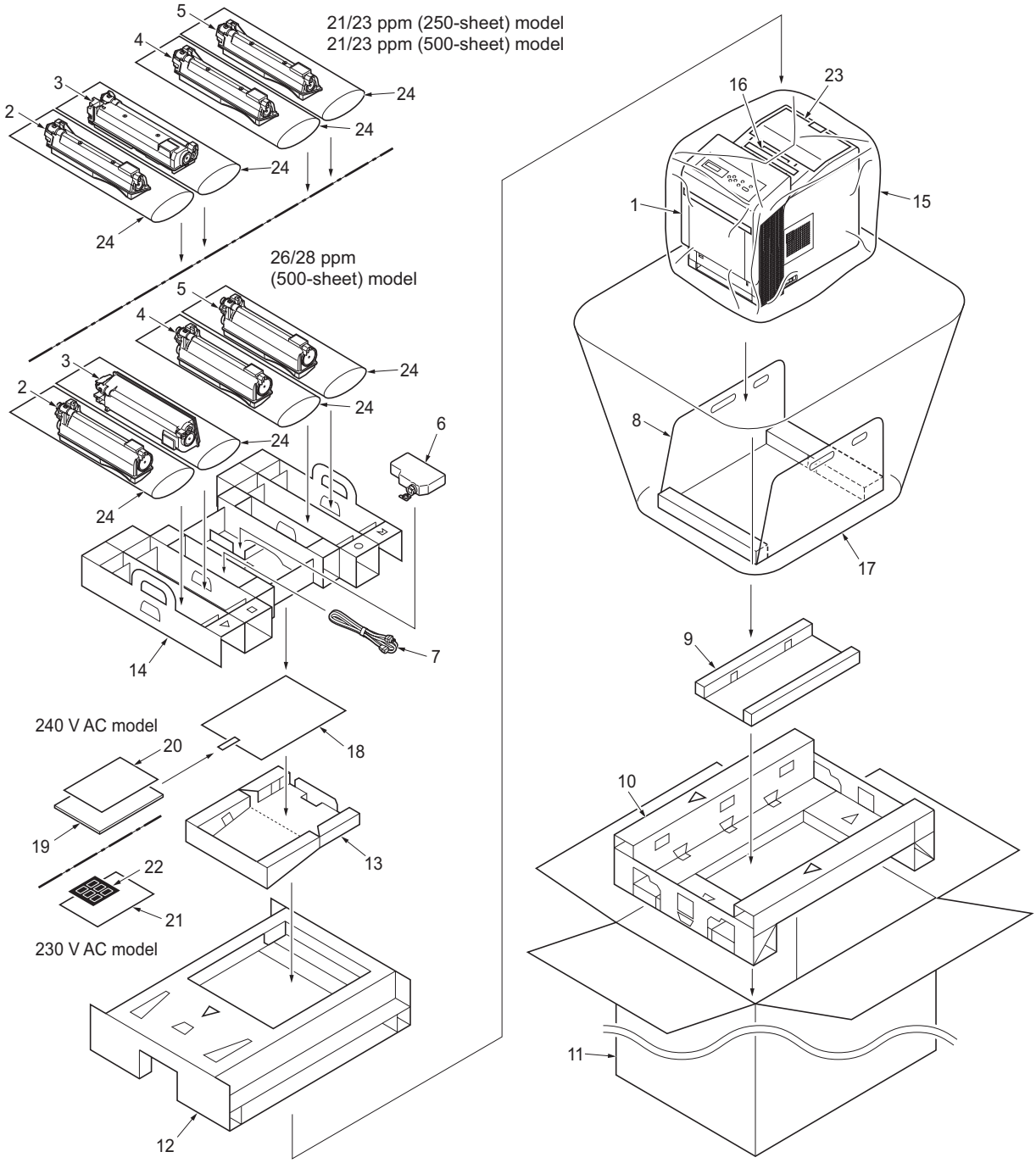

Figure 1-2-2 220-240 V AC model

1. Printer
2. Toner container (Yellow)
3. Toner container (Black)
4. Toner container (Cyan)
5. Toner container (Magenta)
6. Waste toner box
7. Power cord
8. Main pad
9. Bottom pad
10. Bottom front/side pad
11. Outer case
12. Top pad
13. Top tray
14. Top spacer
15. Machine cover
    600 × 600 × 900
16. Desiccating agent
17. Machine cover
    650 × 650 × 1200
18. Plastic bag 240 × 350
19. Operation guide
20. Warranty card
21. Leaflet EEA information
22. 6 nations label
23. Installation guide
24. Plastic bags 200 × 700

120 V AC model

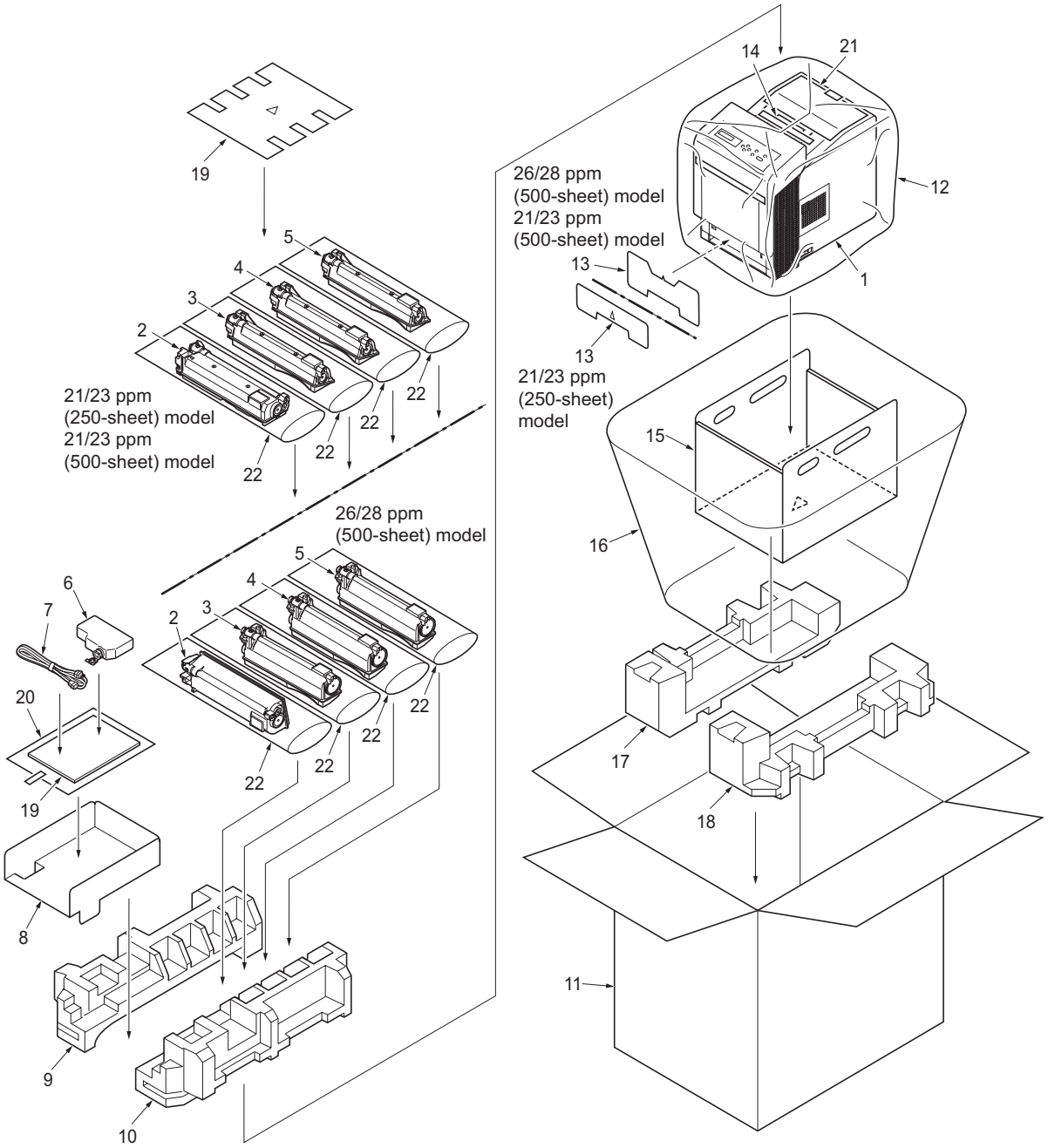

Figure 1-2-3 120 V AC model

1. Printer
2. Toner container (Yellow)
3. Toner container (Black)
4. Toner container (Cyan)
5. Toner container (Magenta)
6. Waste toner box
7. Power cord
8. Document tray
9. Upper left cushion
10. Upper right cushion
11. Outer case
12. Machine cover 600 × 600 × 900
13. Cassette cushion
14. Desiccating agent
15. Main pad
16. Machine cover 650 × 650 × 1200
17. Bottom left cushion
18. Bottom right cushion
19. Plastic bag 240 × 350
20. Operation guide
21. Installation guide
22. Plastic bags 200 × 700

(2) Removing the tape

<Procedure>

1. Remove the tape-A.
1. Remove two tapes-B and then remove the installation guide and desiccating agent.

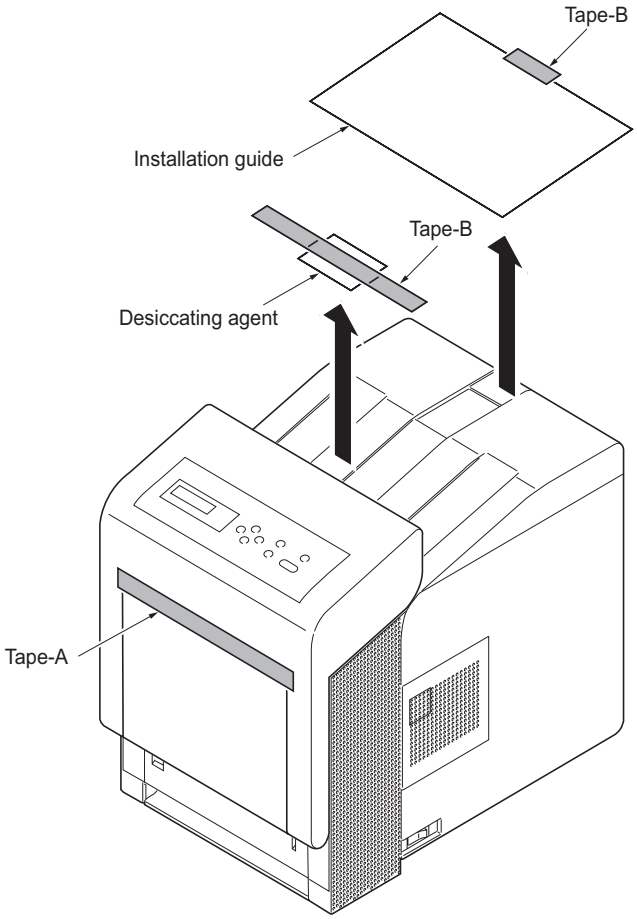

Figure 1-2-4

1-2-3 Installing the expansion memory modules (option)

<Procedure>

1. Turn off printer power switch.
   Caution:
   Do not insert or remove expansion memory modules while printer power is on.
   Doing so may cause damage to the printer and the expansion memory modules.
2. Remove the two screws and then remove the main PWB.

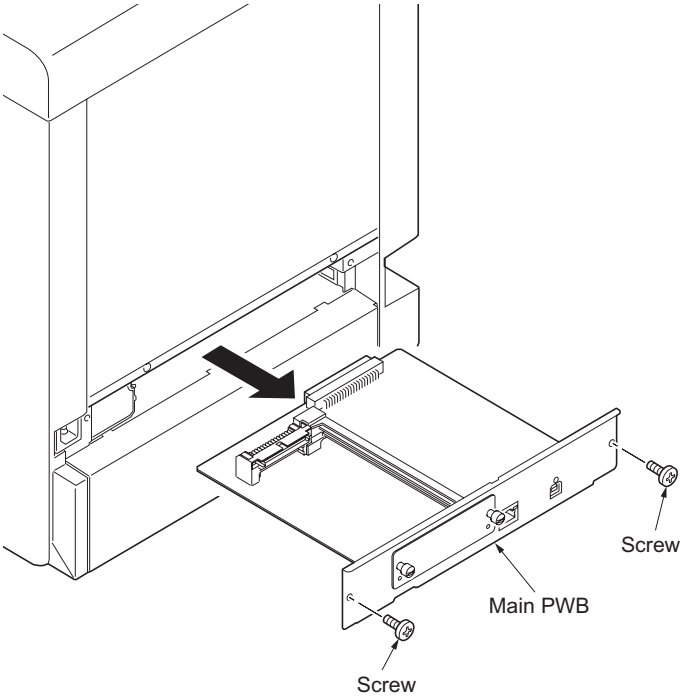

Figure 1-2-5

3. Insert the expansion memory modules into the expansion memory socket so that the notches on the memory align with the corresponding protrusions in the slot.
4. Refit the main PWB.
5. Print a status page to check the memory expansion (See page P.1-3-2).
   If memory expansion has been properly performed, information on the installed memory is printed with the total memory capacity has been increased.
   Standard memory capacity: 256 MB

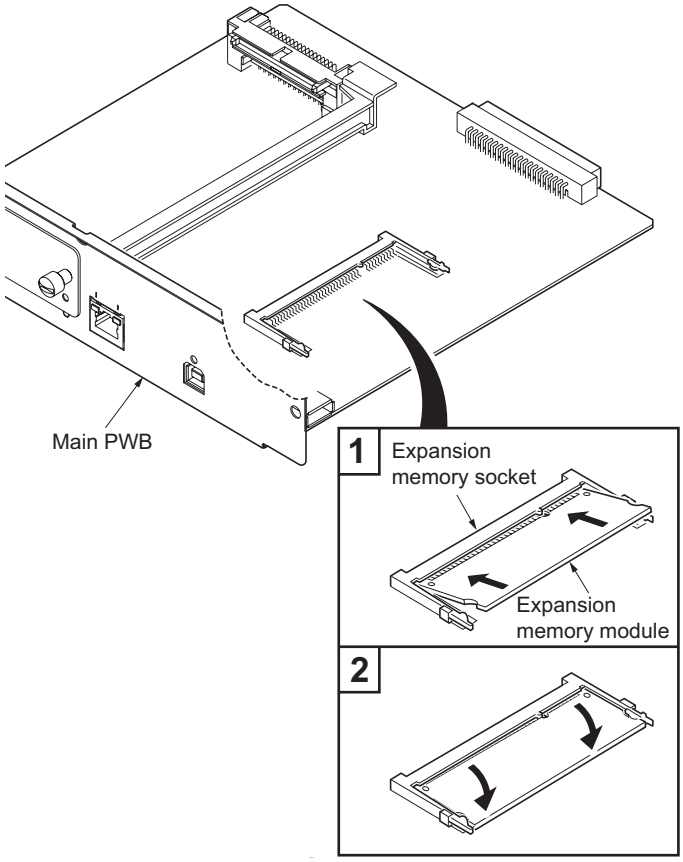

1-2-4 Installing the memory card (option)

<Procedure>

1. Turn off printer power switch.
   Caution:
   Do not insert or remove memory card while printer power is on.
   Doing so may cause damage to the printer and the memory card.
2. Remove the two screws and then remove the main PWB.

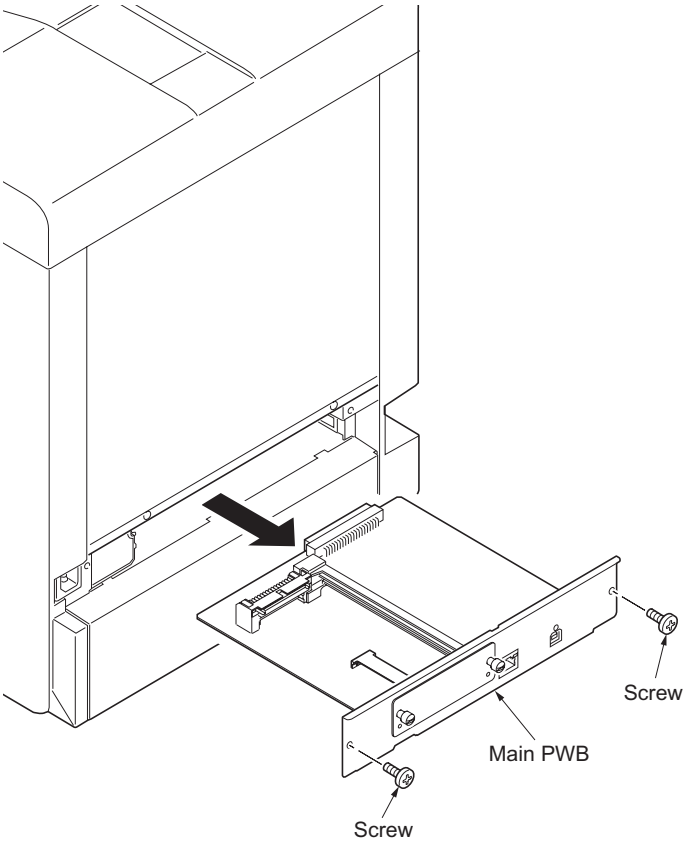

Figure 1-2-7

3. Insert the memory card into the memory card slot. Push it in all the way.
4. Refit the main PWB.

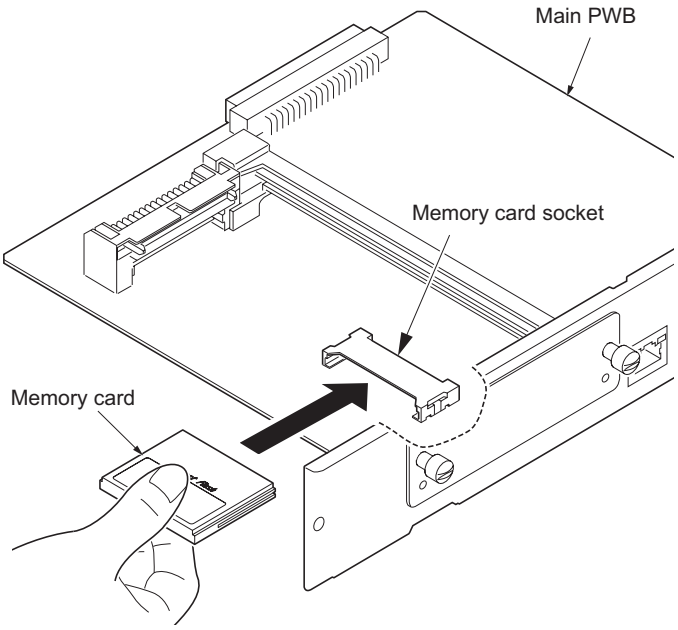

Figure 1-2-8

1-2-5 Installing the hard disk (option for 26/28 ppm [500-sheet] model only)

<Procedure>

1. Turn off printer power switch.
   Caution: Do not insert or remove hard disk unit while printer power is on.
   Doing so may cause damage to the printer and the hard disk.
2. Remove two screws and then remove the option interface slot cover.
3. Insert the hard disk into the option interface slot. Push it in all the way.
4. Secure the hard disk by using two screws.

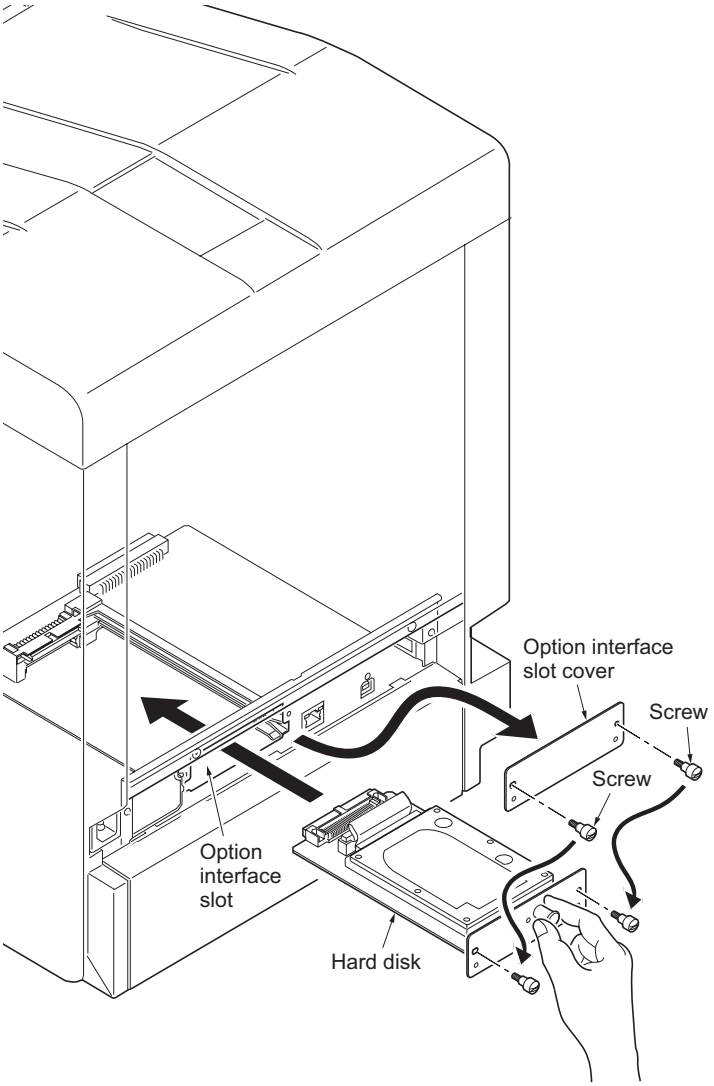

Figure 1-2-9

This page is intentionally left blank.

1-3-1 Maintenance mode

The printer is equipped with a maintenance function which can be used to maintain and service the machine.

(1) Executing a maintenance item

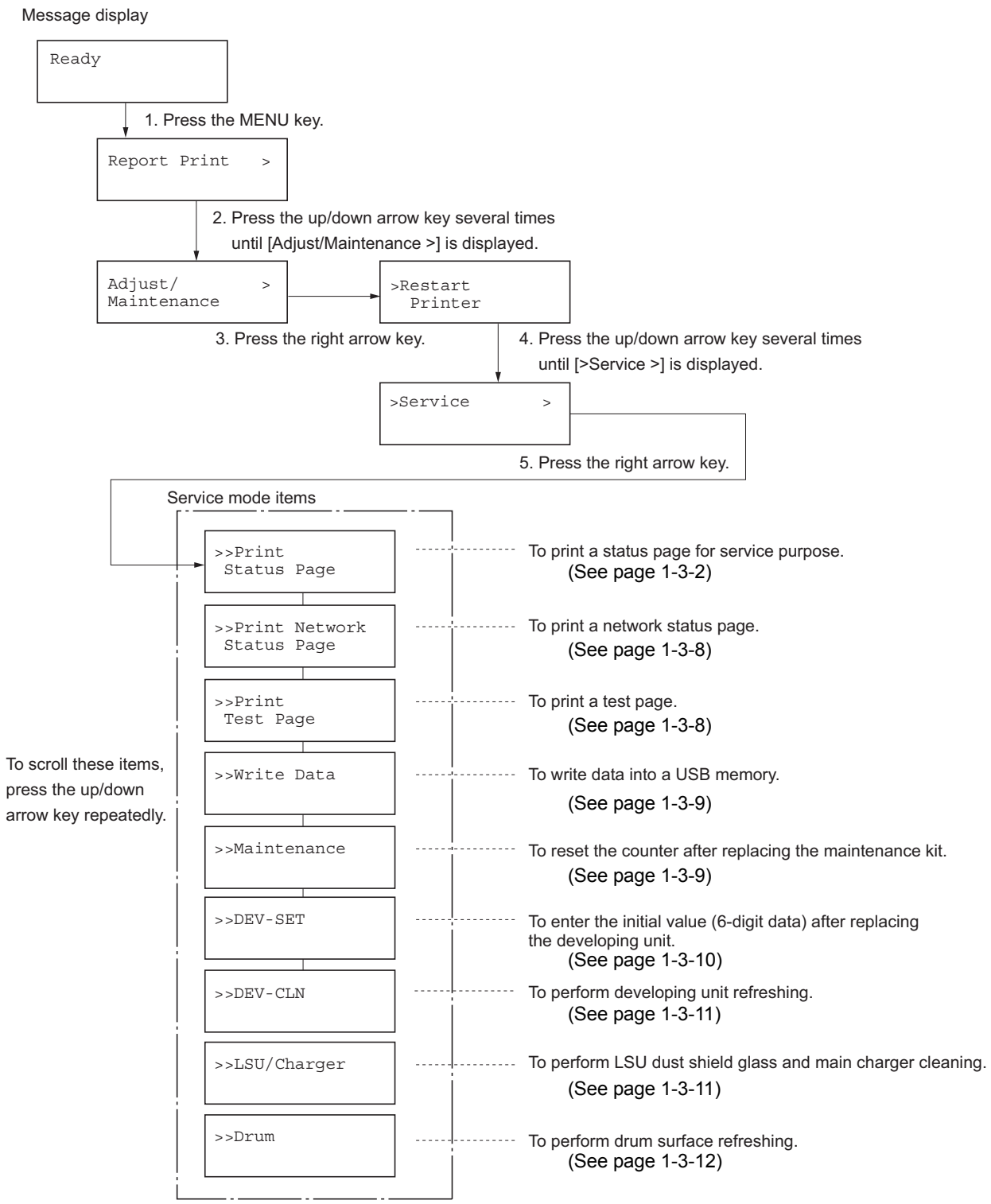

(2) Service mode

Service items	Description
`>>Print Status Page`	**Printing a status page for service purpose** **Description** Prints a status page for service purpose. The status page includes various printing settings and service cumulative. **Purpose** To acquire the current printing environmental parameters and cumulative information. **Procedure** 1. Enter the service mode [>>Print Status Page]. 2. Press the OK key. [Print Status Page?] will be displayed. 3. Press the OK key. Two pages will be printed. **Completion** **Service status page (1)**

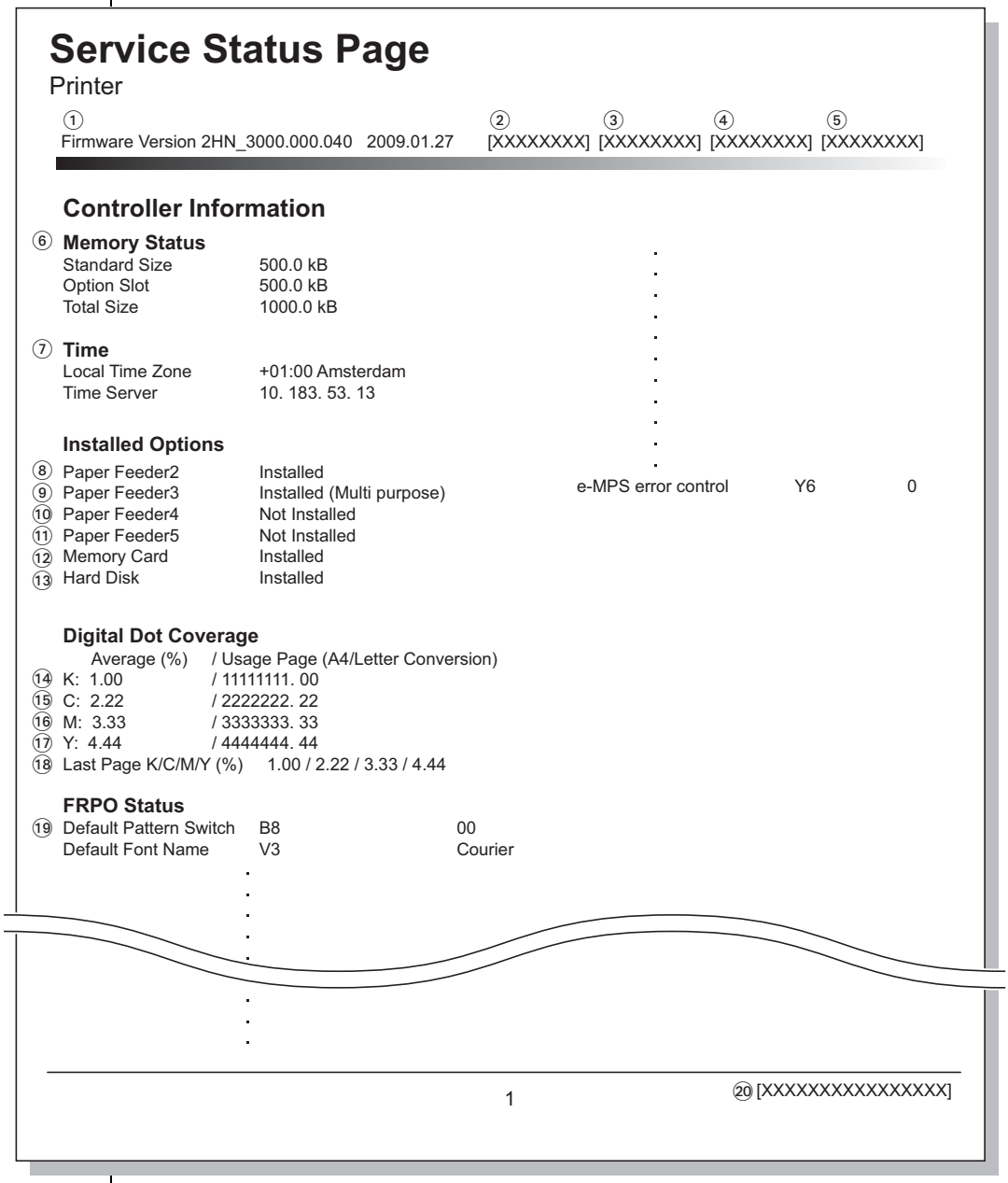

Service Status Page

Printer

① Firmware Version 2HN_3000.000.040 2009.01.27 ② [XXXXXXXX] ③ [XXXXXXXX] ④ [XXXXXXXX] ⑤ [XXXXXXXX]

Controller Information

⑥ **Memory Status**
Standard Size 500.0 kB
Option Slot 500.0 kB
Total Size 1000.0 kB

⑦ **Time**
Local Time Zone +01:00 Amsterdam
Time Server 10. 183. 53. 13

Installed Options
⑧ Paper Feeder2 Installed
⑨ Paper Feeder3 Installed (Multi purpose)
⑩ Paper Feeder4 Not Installed
⑪ Paper Feeder5 Not Installed
⑫ Memory Card Installed
⑬ Hard Disk Installed

e-MPS error control Y6 0

Digital Dot Coverage
Average (%) / Usage Page (A4/Letter Conversion)
⑭ K: 1.00 / 11111111. 00
⑮ C: 2.22 / 2222222. 22
⑯ M: 3.33 / 3333333. 33
⑰ Y: 4.44 / 4444444. 44
⑱ Last Page K/C/M/Y (%) 1.00 / 2.22 / 3.33 / 4.44

FRPO Status
⑲ Default Pattern Switch B8 00
Default Font Name V3 Courier

1 ⑳ [XXXXXXXXXXXXXXXX]

Figure 1-3-1

Service items	Description
	Detail of service status page (1)

No.	Items	Description
①	Firmware version	-
②	Engine software version	-
③	Engine boot version	-
④	Main ROM version	-
⑤	Panel mask version	-
⑥	Used memory	-
⑦	Local time zone	-
⑧	Presence or absence of the optional paper feeder 1	Installed: Paper feeder (Normal) Installed (Multi purpose): Multi purpose feeder Not Installed: Absence
⑨	Presence or absence of the optional paper feeder 2	Installed: Paper feeder (Normal) Installed (Multi purpose): Multi purpose feeder Not Installed: Absence
⑩	Presence or absence of the optional paper feeder 3	Installed: Paper feeder (Normal) Installed (Multi purpose): Multi purpose feeder Not Installed: Absence
⑪	(Presence or absence of the paper feeder 4)	Installed: Paper feeder (Normal) Installed (Multi purpose): Multi purpose feeder Not Installed: Absence
⑫	Presence or absence of the optional memory card	Installed: Presence Not Installed: Absence
⑬	Presence or absence of the optional hard disk unit	Installed: Presence Not Installed: Absence
⑭	Black toner coverage	Number of pages printed converted in reference to A4 or Letter size.
⑮	Cyan toner coverage	Number of pages printed converted in reference to A4 or Letter size.
⑯	Magenta toner coverage	Number of pages printed converted in reference to A4 or Letter size.
⑰	Yellow toner coverage	Number of pages printed converted in reference to A4 or Letter size.
⑱	Coverage of the latest print out	Black/Cyan/Magenta/Yellow
⑲	FRPO settings	-
⑳	Machine number	-

Service items	Description
	Service status page (2)

Service Status Page

Printer

Firmware Version 2HN_3000.000.040 2009.01.27 [XXXXXXXX] [XXXXXXXX] [XXXXXXXX] [XXXXXXXX]

Engine Information

㉑ NVRAM Version XXXXXXXXXXX
㉒ MAC Address 00:00:00:00:00:00

1/2 ㉓㉔
㉕ 100/100
㉖ 1/5
㉗ 0/0/0/0/0/0/0
㉘ 0/0/0/0/0/0/0
㉙ 0/0/0/0/0/0/0/0/
㉚ 0000000/0000000/0000000/0000000/0000000/0000000/0000000/
0000000/0000000/0000000/0000000/0000000/0000000/0000000/0000000/0000000/0000000/
F00/U00/0/0/0/0/30/30/70/70/00/00/ABCDE/ ㉛㉜㉝㉞㉟㊱㊲㊳㊴㊵㊶㊷㊸
㊹ 0000/0000/0000/0000/0000/0000/0000/0000/0000/0000/0000/0000/0000/0000/0000/
0000/0000/0000/0000/0000/0000/0000/0000/0000/0000/
㊺ 0203040508090A0B0C0D0F101112131415161718191A1B1C1D1E1F202122235E
㊻ 0000/0100/0500/1000/0000/0100/0500/1000/0000/0100/0500/1000/0000/0100/0500/1000/
0000/0100/0500/1000/0000/0100/0500/1000/0000/0100/0500/1000/0000/0100/0500/1000/
㊼ 0000000000000000000000000000000000000000000000000000000000000000000000000000000000000000000000000000/
0000000000000000000000000000000000000000000000000/
0000000000000000000000000000000000000000000000000/0000000000/ ㊽㊾
㊿ 0000000000000000/0000000000000000/0000000000000000/0000000000000000/0000000000000000/
0000000000000000/0000000000000000/0000000000000000/0000000000000000/0000000000000000/
0000000000000000/0000000000000000/0000000000000000/0000000000000000/0000000000000000/
(51) 0000000000000000/0000000000000000/0000000000000000/0000000000000000/0000000000000000/
(52) 0000000000000000/0000000000000000/0000000000000000/0000000000000000/
(53) 0000000000000000/0000000000000000/0000000000000000/0000000000000000/0000000000000000/
0000000000000000/0000000000000000/0000000000000000/0000000000000000/0000000000000000/
(54) 0000000000000000/0000000000000000/0000000000000000/0000000000000000/0000000000000000/
(55) 0000000000000000/0000000000000000/0000000000000000/0000000000000000/0000000000000000/
(56) 12345678/11223344/00001234abcd567800001234abcd5678/0123456789012345678901234567890 1/0008/00/07
12345678/11223344/00001234abcd567800001234abcd5678/0123456789012345678901234567890 1/0008/00/07
12345678/11223344/00001234abcd567800001234abcd5678/0123456789012345678901234567890 1/0008/00/07
12345678/11223344/00001234abcd567800001234abcd5678/0123456789012345678901234567890 1/0008/00/07
(57) XXXXXXXX
(58) FFFFFFFFFFFFFFFF/FFFFFFFFFFFFFFFF/FFFFFFFFFFFFFFFF/FFFFFFFFFFFFFFFF/
FFFFFFFFFFFFFFFF/FFFFFFFFFFFFFFFF/FFFFFFFFFFFFFFFF/FFFFFFFFFFFFFFFF/
FFFFFFFFFFFFFFFF/FFFFFFFFFFFFFFFF/FFFFFFFFFFFFFFFF/FFFFFFFFFFFFFFFF/
FFFFFFFFFFFFFFFF/FFFFFFFFFFFFFFFF/FFFFFFFFFFFFFFFF/FFFFFFFFFFFFFFFF/
FFFFFFFFFFFFFFFF/FFFFFFFFFFFFFFFF/FFFFFFFFFFFFFFFF/FFFFFFFFFFFFFFFF/
FFFFFFFFFFFFFFFF/FFFFFFFFFFFFFFFF/FFFFFFFFFFFFFFFF/FFFFFFFFFFFFFFFF/
FFFFFFFFFFFFFFFF/FFFFFFFFFFFFFFFF/FFFFFFFFFFFFFFFF/FFFFFFFFFFFFFFFF/
FFFFFFFFFFFFFFFF/FFFFFFFFFFFFFFFF/FFFFFFFFFFFFFFFF/FFFFFFFFFFFFFFFF/
(59) [ABCDEFGHIJ][ABCDEFGHIJ][ABCDEFGHIJ][ABCDEFGHIJ]
[ABCDEFGHIJ][ABCDEFGHIJ][ABCDEFGHIJ][ABCDEFG][ABCDEFGHIJ] (60)(61)(62)(63)(64)
(65) ABCDEFGHIJ/ABCDEFGHIJ/ABCDEFGHIJ/ABCDEFGHIJ/
0000/0000/0000/0000/ABCDEFGHIJ/ABCDEFGHIJ/ABCDEFGHIJ/ABCDEFGHIJ/ (66)(67)

2 [XXXXXXXXXXXXXXXX]

Figure 1-3-2

Service items	Description
	Detail of service status page (2)

No.	Items	Description
㉑	NVRAM version	_ 1F3 1225 _ 1F3 1225 (a) (b) (c) (d) (e) (f) a) Consistency of the present software version and the database _ (underscore): OK * (Asterisk): NG (b) Database version (c) The oldest time stamp of database version (d) Consistency of the present software version and the ME firmware version _ (underscore): OK * (Asterisk): NG (e) ME firmware version (f) The oldest time stamp of the ME database version Normal if (a) and (d) are underscored, and (b) and (e) are identical with (c) and (f).
㉒	Mac address	-
㉓	Destination information	-
㉔	Area information	-
㉕	Margin settings	Top margin/Left margin
㉖	Low Power mode settings	-
㉗	Top offset for each paper source	MP tray/Paper feeder 1/Paper feeder 2/Paper feeder 3/ - /Duplex/ Page rotation
㉘	Left offset for each paper source	MP tray/Paper feeder 1/Paper feeder 2/Paper feeder 3/ - /Duplex/ Page rotation
㉙	L value settings	Top margin (integer)/Top margin (decimal place)/Left margin (integer)/Left margin (decimal place)/Paper length (integer)/Paper length (decimal place)/ Paper width (integer)/Paper width (decimal place)/
㉚	Life counter (The first line)	Machine/MP tray/Printer's cassette/Paper feeder 1/Paper feeder 2/ Paper feeder 3/ - /Duplex printing
	Life counter (The second line)	Drum unit K/Drum unit C/Drum unit M/Drum unit Y/ Intermediate transfer unit/Developing unit K/Developing unit C/ Developing unit M/Developing unit Y/Maintenance kit
㉛	Operation panel lock status	0: Off 1: Partial lock 2: Full lock
㉜	USB information	0: Not connected 1: Full-Speed 2: Hi-Speed
㉝	Paper handling information	0: Paper source unit select 1: Paper source unit
㉞	Color printing double count mode	0: All single counts 3: Folio, Single count, Less the 330 mm (length)
㉟	Black and white printing double count mode	0: All single counts 3: Folio, Single count, Less the 330 mm (length)

Service items	Description

No.	Items	Description
㊱	Billing counting timing	-
㊲	Temperature (machine inside)	-
㊳	Temperature (machine outside)	-
㊴	Relative temperature (machine outside)	-
㊵	Absolute temperature (machine outside)	-
㊶	LSU information	-
㊷	LSU2 information	-
㊸	Fixed asset number	-
㊹	Media type attributes 1 to 28 (Not used: 18, 19, 20)	Weight settings 0: Light 1: Normal 1 2: Normal 2 3: Normal 3 4: Heavy 1 5: Heavy 2 6: Heavy 3 7: Extra Heavy Fuser settings 0: High 1: Middle 2: Low 3: Vellum Duplex settings 0: Disable 1: Enable
㊺	SPD information	-
㊻	Calibration information	-
㊼	Calibration information	-
㊽	Calibration information	-
㊾	Calibration information	-
㊿	Calibration information	-
51	Calibration information	-
52	Calibration information	-
53	Calibration information	-
54	Calibration information	-
55	Calibration information	-
56	RFID information	-
57	RFID reader/writer version information	-
58	Engine parameter information	hexadecimal, 512 bytes
59	Optional paper feeder software version	[Paper feeder 1][Paper feeder 2][Paper feeder 3][Paper feeder 4]

Service items	Description

No.	Items	Description
⑥⓪	Optional font version	-
⑥①	Optional table version	-
⑥②	Optional message version	-
⑥③	WEB option version	-
⑥④	Color table version	-
⑥⑤	Developing unit serial number	Black/Cyan/Magenta/Yellow/
⑥⑥	Drum unit ID	Black/Cyan/Magenta/Yellow/
⑥⑦	Drum unit serial number	Black/Cyan/Magenta/Yellow/

NOTE:

Code conversion

A	B	C	D	E	F	G	H	I	J
0	1	2	3	4	5	6	7	8	9

Service items	Description
`>>Print Network Status Page`	**Printing a status page for network** **Description** On the status page for network, detailed network setting information is printed. **Procedure** 1. Enter the service mode [>>Print Network Status Page]. 2. Press the OK key. [>>Print Network Status Page?] will be displayed. 3. Press the OK key. Three sheets of network status page will be printed. **Completion**
`>>Print Test Page`	**Printing a test page** **Description** Four colors are printed respectively with halftones of three different levels. **Purpose** To check the activation of the developer and drum units of four colors. **Procedure** 1. Enter the service mode [>>Print Test Page]. 2. Press the OK key. [>>Print Test Page?] will be displayed. 3. Press the OK key. A sheet of test page will be printed. **Completion** 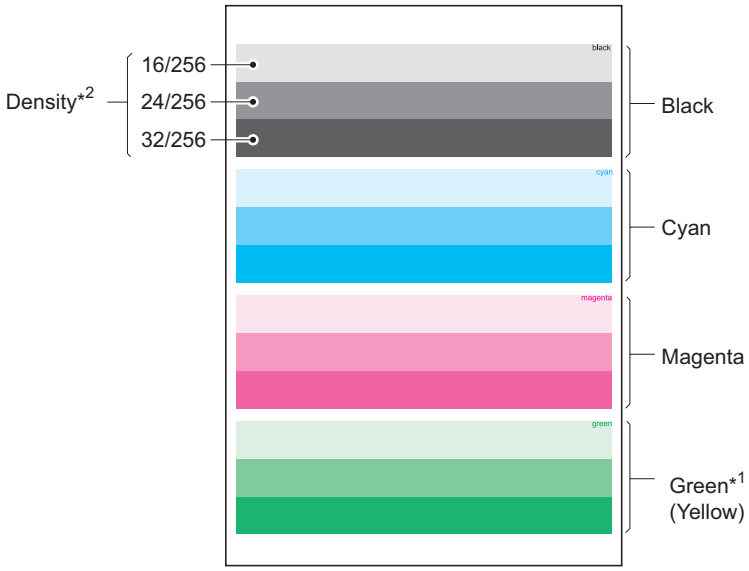 *1: Since focusing in yellow is hardly readable, yellow is mixed with cyan for more readability, resulting in green. *2: Each portion of colors has three different magnitude of halftones (bands). If focus is excessively lost, dots are not recognizable with the 16/256 band, resulting in uneven density. It also results in vertical streaks in the 24/256 and/or 32/256 bands. **Figure 1-3-3 Test page**

Service items	Description
>>Write Data	**Write data (USB memory data write)** **Description** To write data into a USB memory. **Procedure** Install the USB memory before attempting to write data. 1. Enter the service mode [>>Write Data]. 2. Press the OK key. [>>Write Data?] will be displayed. 3. Press the OK key. [Data waiting] is displayed and the printer waits for data to be written. 4. When the data is sent, [Processing] appears and the data is written to USB memory. When data writing ends, the display returns to [Ready]. **Completion**
>>Maintenance	**Counter reset for the maintenance kit** **Description** The "Install MK" message means that maintenance kit should be replaced at 200,000 pages of printing. The interval counter must be manually reset using this service item. Maintenance kit includes the following units: Drum unit × 4 Developing unit M, C, Y and K Fuser unit Intermediate transfer roller Paper feed roller assembly Retard roller assembly Ozone filter **Purpose** To reset the life counter for the drum units, developing units, intermediate transfer unit, and fuser unit included in maintenance kit. **Procedure for replacing the maintenance kit** Drum unit × 4 (See page 1-5-15) Developing unit M, C, Y and K (See page 1-5-13) Fuser unit (See page 1-5-26) Intermediate transfer unit (See page 1-5-17) Paper feed roller assembly (See page 1-5-8) Retard roller assembly (See page 1-5-10) Ozone filter (See page 1-5-40) **Procedure** 1. Enter the service mode [>>Maintenance]. 2. Press the OK key. [>>Maintenance?] will be displayed. 3. Press the OK key twice. The counter for each component is reset immediately. **Completion** Note: Occurrences of resetting the maintenance kits are recorded on the service status page in number of pages at which the maintenance kit was replaced (See page 1-3-2). This may be used to determine the possibility that the counter was errorneously or unintentionally reset.

Service items	Description
>>DEV-SET	**Entering initial value (6-digit data) for replacing the developing unit** **Description** After replacing the developing unit, enter the initial value (6-digit data) assigned on a label attached to the package or developing unit. **Procedure** 1. Enter the service mode [>>DEV-SET]. 2. Press the OK key. [>>DEV-SET 000000] will be displayed. 3. Enter the initial value (6-digit data) with cursor keys. 6-digit data is assigned on a label attached to the package or developing unit. 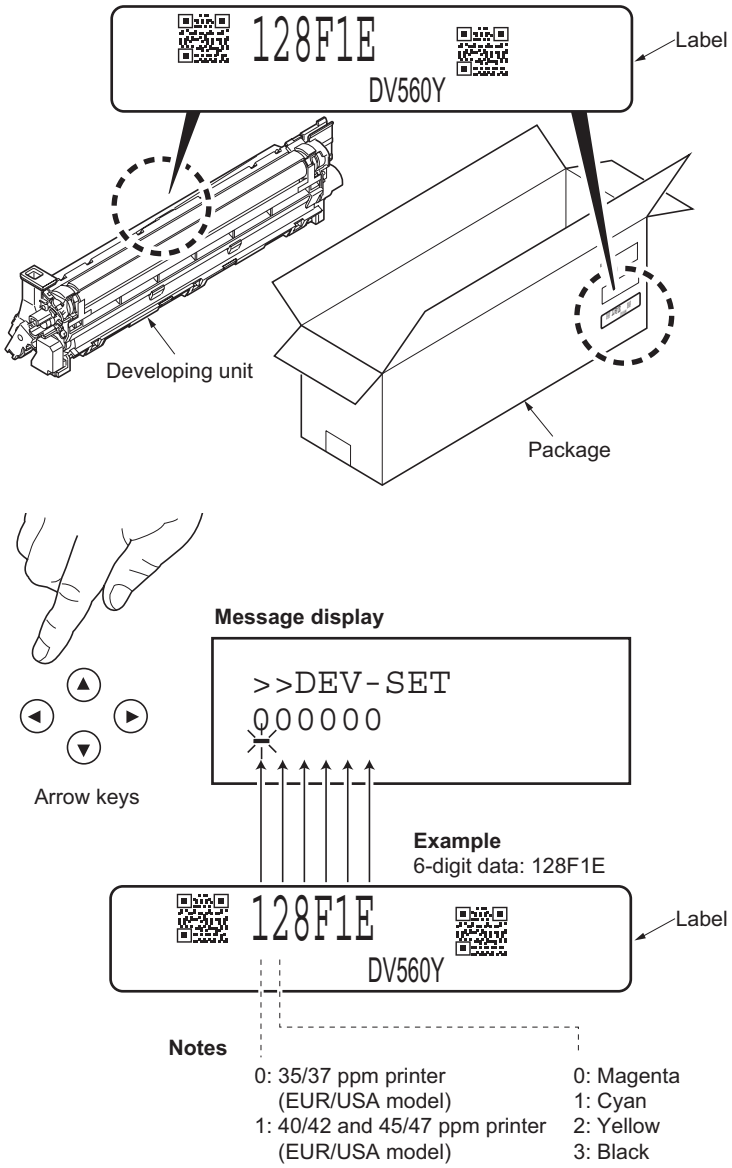 4. Press the OK key. [>>OK? 128F1E] will be displayed. 5. Press the OK key. [DEV-SET] will be displayed. The initial value (6-digit data) is set. **Completion**

Service items	Description
>>DEV-CLN	**Developer refreshing** **Description** The laser output of the image data for developer refreshing is carried out, and operation to exposure, developing, and primary transfer is performed by 10 pages. (Paper is not fed) **Purpose** To perform cleaning when faulty images occur and a line appears longitudinally. **Procedure** 1. Enter the service mode [>>DEV-CLN]. 2. Press the OK key. [>>DEV-CLN?] will be displayed. 3. Press the OK key. Developer refreshing will be started. **Completion** 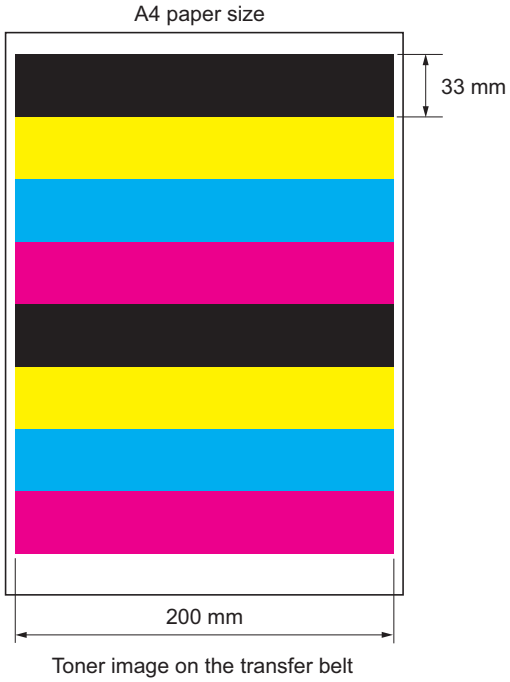 **Figure 1-3-4Developer refreshing Image data**
>>LSU/Charger	**LSU dust shield glass and main charger cleaning** **Description** The LSU cleaning motor drives the cleaning pad which in turn wipes clean the LSU dust shield glass. The main charger cleaning motor drives the cleaning pad which in turn wipes clean the main charger wire and the main charger grid. **Purpose** To perform cleaning when the printed image is bad and stripes are seen in the vertical direction. **Procedure** 1. Enter the service mode [>>LSU/Charger]. 2. Press the OK key. [>>LSU/Charger?] will be displayed. 3. Press the OK key. LSU dust shield glass and main charger cleaning will be started. **Completion**

Service items	Description
>>Drum	**Drum surface refreshing** **Description** Rotates the drum approximately 2 minutes with toner lightly on the overall drum using the high-voltage output control of the engine PWB. The cleaning blade in the drum unit scrapes toner off the drum surface to clean it. **Purpose** To clean the drum surface when image failure occurs due to the drum. This mode is effective when dew condensation on the drum occurs. **Method** 1. Enter the service mode [>>Drum]. 2. Press the OK key. [>>Drum?] will be displayed. 3. Press the OK key. Drum surface refreshing will start and finish after approximately 2 minutes. **Completion**

(3) Printing a event log (EVENT LOG)

Service items	Description
Printing an event log (EVENT LOG)	**Printing an event log (EVENT LOG)** **Description** Prints a history list of occurrences of paper jam, self-diagnostics, toner replacements, etc. **Purpose** To allow machine malfunction analysis based on the frequency of paper misfeeds, self diagnostic errors and replacements. **Procedure** 1. Connect the USB or network cable between printer and PC (network). 2. Connect the power cord. 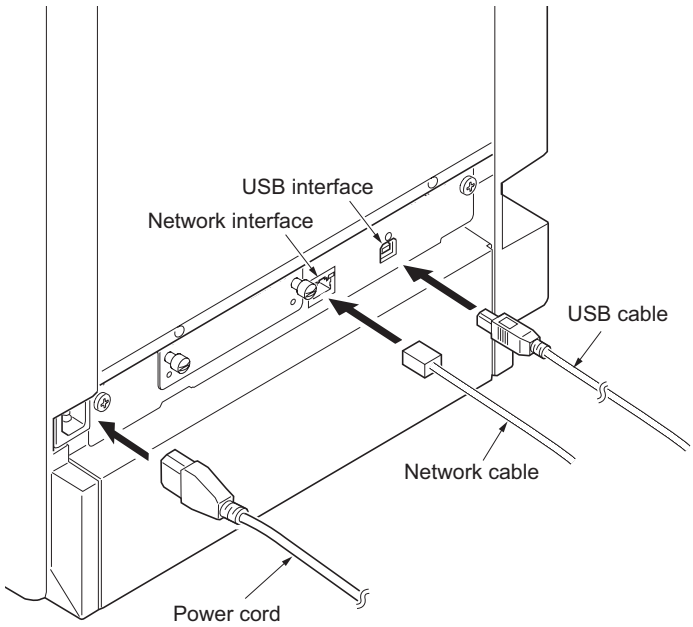 **Figure 1-3-5** 3. Turn printer power on. Make sure the printer is ready. 4. Send the following PRESCRIBE command sequence from the PC to the printer. `!R!KCFG"ELOG";EXIT;` Note: To send a PRESCRIBE command sequence to the printer, use COMMAND CENTER (the printer's embedded web) while the printer is connected to the PC via its network interface. A sheet of event log will be printed. **Completion**

Service items	Description
	Detail of event log

Event Log

Printer

① Firmware Version 2HN_3000.000.000 2009.01.27 ② [XXXXXXXX] ③ [XXXXXXXX] ④ [XXXXXXXX] ⑤ [XXXXXXXX]

⑦ Paper Jam Log

#	Count.	Event Descriptions
16	9999999	10. 01. 88. 01. 01
15	8888888	10. 01. 88. 01. 01
14	7777777	10. 01. 88. 01. 01
13	6666666	10. 01. 88. 01. 01
12	5555555	10. 01. 88. 01. 01
11	4444444	10. 01. 88. 01. 01
10	3333333	10. 01. 88. 01. 01
9	2222222	10. 01. 88. 01. 01
8	1111111	10. 01. 88. 01. 01
7	999999	10. 01. 88. 01. 01
6	888888	10. 01. 88. 01. 01
5	777777	10. 01. 88. 01. 01
4	666666	10. 01. 88. 01. 01
3	555555	10. 01. 88. 01. 01
2	444444	10. 01. 88. 01. 01
1	1	10. 01. 88. 01. 01

10. 01. 88. 01. 01
(a) (b) (c) (d) (e)

⑧ Service Call Log

#	Count.	Service Code
8	1111111	00. 0000
7	999999	00. 0000
6	888888	00. 0000
5	777777	00. 0000
4	666666	00. 0000
3	555555	00. 0000
2	444444	00. 0000
1	1	00. 0000

⑨ Maintenance Log

#	Count.	Item
		Log Data Nothing...

⑩ Unknown Toner Log

#	Count.	Item
5	1111111	00. 00
4	999999	00. 00
3	888888	00. 00
2	777777	00. 00
1	666666	00. 00

⑪ Counter Log

(f)

J00:	0	J13:	1	J25:	1
J01:	1	J14:	1	J26:	1
J02:	11	J15:	1	J27:	1
J03:	222	J16:	1	J28:	1
J04:	1	J17:	1	J29:	1
J05:	1	J18:	1	J30:	1
J06:	1	J19:	1	J31:	1
J07:	1	J20:	1	J32:	1
J08:	1	J21:	1	J33:	1
J09:	1	J22:	1	J34:	1
J10:	1	J23:	1	J35:	1
J12:	999	J24:	1	J36:	1

(g)

C0000:	0	C0012:	12
C0001:	1	C0013:	13
C0002:	2	C0014:	14
C0003:	3	C0015:	15
C0004:	4	C0016:	16
C0005:	5	C0017:	17
C0006:	6	C0018:	18
C0007:	7	C0019:	19
C0008:	8	C0020:	20
C0009:	9	C0021:	21
C0010:	10	C0022:	22
C0011:	11	C0023:	23

(h)

T00:	10
T01:	20
T02:	30
T03:	40
T04:	50
T05:	999

⑥ [XXXXXXXXXXXXXXXX]

Figure 1-3-6

No.	Items	Description
①	Firmware version	-
②	Engine software version	-
③	Engine boot version	-
④	Main ROM version	-
⑤	Panel mask version	-
⑥	Machine No.	-

Service items	Description

No.	Items	Description		
⑦ cont.	Paper Jam Log	#	Count.	Event
		Remembers 1 to 16 of occurrence. If the occurrence of the previous paper jam is less than 16, all of the paper jams are logged. When the occurrence excessed 16, the oldest occurrence is removed.	The total page count at the time of the paper jam.	Log code (2 digit, hexadecimal, 5 categories) (a) Cause of a paper jam (b) Paper source (c) Paper size (d) Paper type (e) Paper exit

(a) Cause of paper jam

10: Paper does not arrive at the registration sensor. [B] (MP tray)
10: Paper does not arrive at the registration sensor. [1] (Printer's cassette)
10: Paper does not arrive at the registration sensor. [1] (Paper feeder 1)
10: Paper does not arrive at the registration sensor. [1] (Paper feeder 2)
10: Paper does not arrive at the registration sensor. [1] (Paper feeder 3)
10: Paper does not arrive at the registration sensor. [I] (Duplex conveying)
11: Paper does not pass the registration sensor. [H]
12: Paper remains at the registration sensor when power is turned on. [H]
20: Paper does not arrive at the paper exit sensor. [H]
21: Paper does not pass the paper exit sensor. [G]
22: Paper remains at the paper exit sensor when power is turned on. [G]
30: Paper does not arrive at the paper feeder 1's PF paper feed sensor. [2] (Paper feeder 1)
30: Paper does not arrive at the paper feeder 1's PF paper feed sensor. [3] (Paper feeder 2)
30: Paper does not arrive at the paper feeder 1's PF paper feed sensor. [3] (Paper feeder 3)
31: Paper does not pass the paper feeder 1's PF paper sensor. [2]
32: Paper remains at the paper feeder 1's PF paper feed sensor when power is turned on. [2]
40: Paper does not arrive at the paper feeder 2's PF paper feed sensor. [3] (Paper feeder 2)
40: Paper does not arrive at the paper feeder 2's PF paper feed sensor. [4] (Paper feeder 3)
41: Paper does not pass the paper feeder 2's PF paper sensor. [3]
42: Paper remains at the paper feeder 2's PF paper feed sensor when power is turned on. [3]
50: Paper does not arrive at the paper feeder 3's paper feed sensor. [4] (Paper feeder 3)
51: Paper does not pass the paper feeder 3's paper sensor. [4]
52: Paper remains at the paper feeder 3's PF paper feed sensor when power is turned on. [4]
A0: Paper does not arrive at the duplex sensor. [I]
A1: Paper does not pass the duplex sensor. [I]
A2: Paper remains at the duplex sensor when power is turned on. [I]
E0: Paper misfeed occurs due to forced stop when an error occurs during printing. (such as opening of a cover)
F0: Paper does not arrive at the face down tray paper full sensor. [G]
F1 to FF: Paper misfeed by another cause.

Values (hexadecimal) within [ ] indicate paper misfeed locations.

Service items	Description

No.	Items	Description
⑦ cont.	Paper Jam Log	**Jam location**

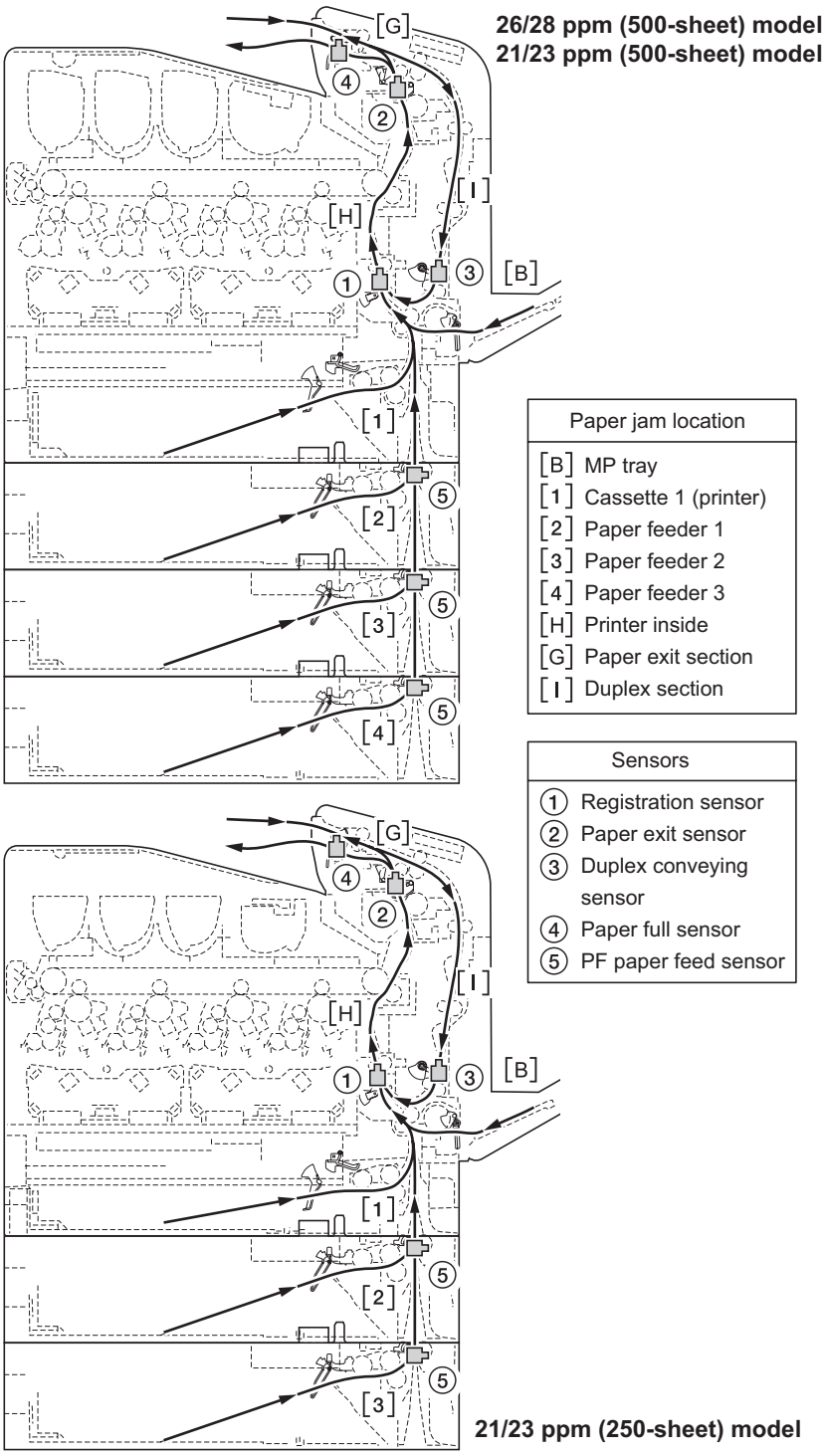

Figure 1-3-7

Service items	Description

No.	Items	Description		
⑦ cont.	Paper Jam Log	(b) Detail of paper source (Hexadecimal)		
		00: MP tray 01: Paper cassette 1 (printer) 02: Paper cassette 2 (paper feeder 1) 03: Paper cassette 3 (paper feeder 2) 04: Paper cassette 4 (paper feeder 3) 05: -		06: - 07: Duplex unit 08: Bulk paper feeder 09: Envelope feeder
		(c) Detail of paper size (Hexadecimal)		
		01: Monarch 02: Business 03: International DL 04: International C5 05: Executive 06: Letter-R 86: Letter-E 07: Legal 08: A4R 88: A4E 09: B5R 89: B5E 0A: A3 0B: B4	0C: Ledger 0D: A5R 8D: A5E 0E: A6 0F: B6 10: Commercial #9 11: Commercial #6 12: ISO B5 13: Custom size 1E: C4 1F: Postcard 20: Reply-paid postcard 21: Oficio II 22: Special 1	23: Special 2 24: A3 wide 25: Ledger wide 26: Full bleed paper (12 × 8) 27: 8K 28: 16K-R A8: 16K-E 32: Statement-R B2: Statement-E 33: Folio 34: Western type 2 35: Western type 4
		(d) Detail of paper type (Hexadecimal)		
		01: Plain 02: Transparency 03: Preprint 04: Labels 05: Bond 06: Recycle 07: Vellum 08: Rough 09: Letter head	0A: Color 0B: Prepunched 0C: Envelope 0D: Cardstock 0E: Coated 0F: 2nd side 10: Media 16 11: High quality	15: Custom 1 16: Custom 2 17: Custom 3 18: Custom 4 19: Custom 5 1A: Custom 6 1B: Custom 7 1C: Custom 8
		(e) Detail of paper exit location (Hexadecimal)		
		01: Face down tray (FD) 02: Face up tray (FU) 03 to 48: Reserved		
⑧	Service Call (Self diagnostic error) Log	#	Count.	Service Code
		Remembers 1 to 8 of occurrence of self diagnostics error. If the occurrence of the previous diagnostics error is less than 8, all of the diagnostics errors are logged.	The total page count at the time of the self diagnostics error.	Self diagnostic error code (See page 1-4-3) Example 01.6000 01 means a self-diagnostic error; 6000 means a self diagnostic error code.

Service items	Description

No.	Items	Description		
⑨	Maintenance Log NOTE: It is not logged if 100 or more counts are not added to the count at the last occurrence of replacement.	# Remembers 1 to 8 of occurrence of replacement. If the occurrence of the previous replacement of toner container is less than 8, all of the occurrences of replacement are logged.	Count. The total page count at the time of the replacement of the toner container. This is virtually logged as the occurrence of the “Toner Empty” or “Install MK” condition since the replacement of the toner container is not precisely detectable.	Item Code of maintenance replacing item (1 byte, 2 categories) First byte (Replacing item) 01: Toner container Second byte (Type of replacing item) 00: Black 01: Cyan 02: Magenta 03: Yellow First byte (Replacing item) 02: Maintenance kit Second byte (Type of replacing item) 01: Fixed (MK-550/MK-560)
⑩	Unknown Toner Log NOTE: It is not logged if 100 or more counts are not added to the count at the last error.	# Remembers 1 to 5 of occurrence of unknown toner detection. If the occurrence of the previous unknown toner detection is less than 5, all of the unknown toner detection are logged.	Count. The total page count at the time of the “Toner Empty” error with using an unknown toner container.	Item Unknown toner log code (1 byte, 2 categories) First byte 01: Fixed (Toner container) Second byte 00: Black 00: Cyan 00: Magenta 00: Yellow
⑪	Counter Log Comprised of three log counters including paper jams, self diagnostics errors, and replacement of the toner container. NOTE: It is not logged if 100 or more counts are not added to the count at the last error.	(f) Jam Indicates the log counter of paper jams depending on location. Refer to Paper Jam Log. All instances including those are not occurred are displayed.	(g) Self diagnostic error Indicates the log counter of self diagnostics errors depending on cause. (See page 1-4-3) Example C6000: 4 Self diagnostics error 6000 has happened four times.	(h) Maintenance item replacing Indicates the log counter depending on the maintenance item for maintenance. T: Toner container 00: Black 00: Cyan 00: Magenta 00: Yellow M: Maintenance kit 00: (Fixed) Example T00: 1 The (black) toner container has been replaced once. This is virtually logged as the occurrence of the” Toner Empty” or “Install MK” condition.

1-4-1 Paper misfeed detection

(1) Paper misfeed indication

If the paper jammed in the paper transport system, or no paper sheets were fed at all, the “Paper jam” message appears and the location of the paper jam (the component where the paper jam has occurred) is also indicated. The printer automatically goes off-line when this message is displayed. Remove jammed paper. After removing jammed paper, the printer will re-start printing.

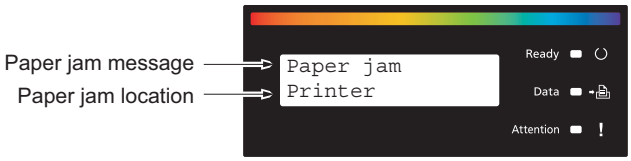

Figure 1-4-1

(2) Paper misfeed detection condition

26/28 ppm (500-sheet) model
21/23 ppm (500-sheet) model

21/23 ppm (250-sheet) model

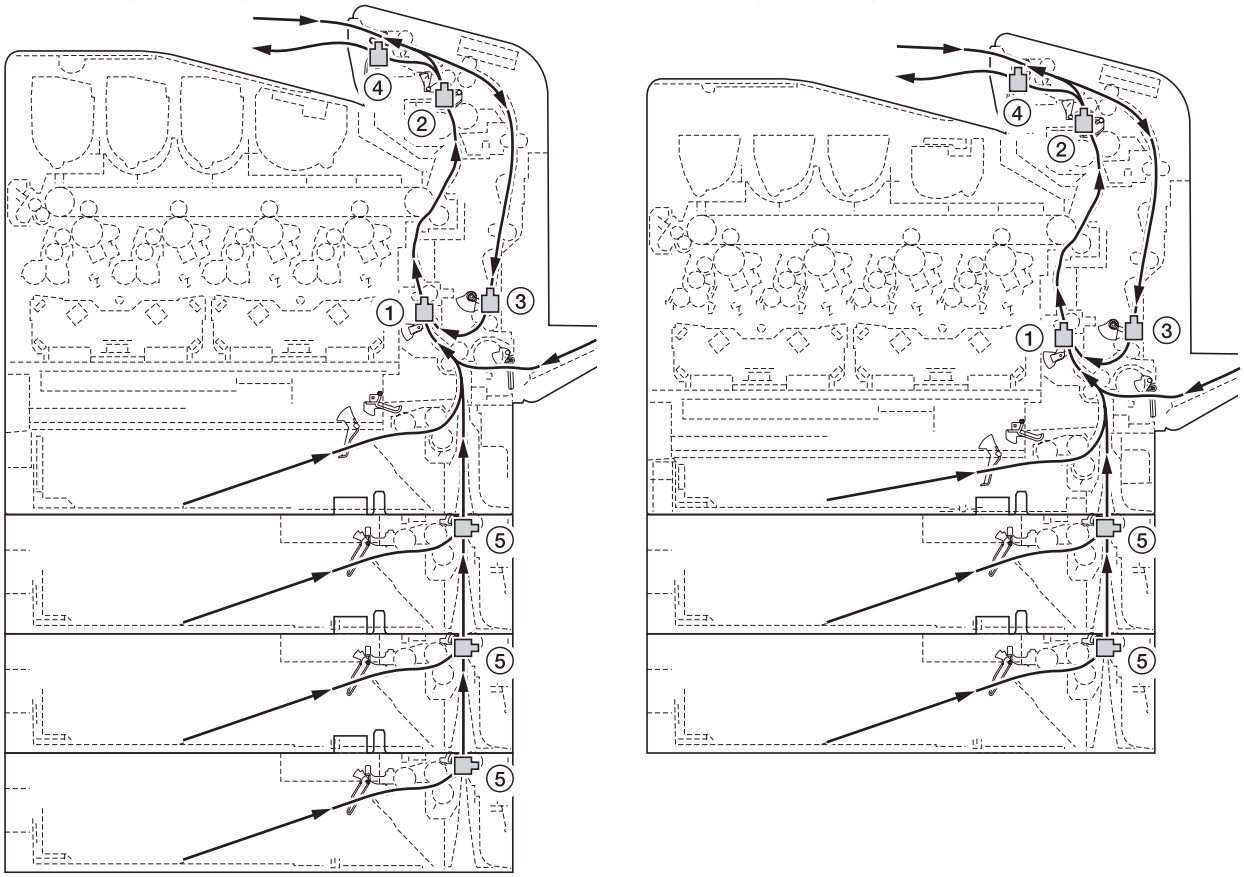

① Registration sensor
② Paper exit sensor
③ Duplex conveying sensor
④ Paper full sensor
⑤ PF paper feed sensor

Figure 1-4-2

1-4-2 Self-diagnostic function

(1) Self-diagnostic function

This printer is equipped with self-diagnostic function. When a problem is detected, the printer stops printing and display an error message on the operation panel. An error message consists of a message prompting a contact to service personnel, total print count, and a four-digit error code indicating the type of the error. (The display varies depending on the type of the error.)

Figure 1-4-3

(2) Self diagnostic codes

Code	Contents	Remarks	
		Causes	Check procedures/corrective measures
0100	**Backup memory read/write error**	Defective main PWB.	Replace the main PWB (See page 1-5-29).
0110	**Backup memory data error**	Defective main PWB.	Replace the main PWB (See page 1-5-29).
0120	**MAC address data error** For data in which the MAC address is invalid.	Defective main PWB.	Replace the main PWB (See page 1-5-29).
0150	**Engine PWB (EEPROM) error** Data read from EEPROM is judged abnormal.	Improper installation EEPROM.	Replace the engine PWB (See page 1-5-30).
		Defective engine PWB.	Replace the engine PWB (See page 1-5-30).
0170	**Billing counting error**	Defective main PWB.	Replace the main PWB (See page 1-5-29).
0420	**Paper feeder communication error** Communication error between engine PWB and optional paper feeder.	Improper installation paper feeder.	Follow installation instruction carefully again.
		Defective harness between PF main PWB (YC3, YC5) and paper feeder interface connector, or improper connector insertion.	Reinsert the connector. Also check for continuity within the connector harness. If none, remedy or replace the harness. (Refer to the service manual for the paper feeder).
		Defective PF main PWB.	Replace the PF main PWB (Refer to the service manual for the paper feeder).
		Defective harness between engine PWB (YC33) and paper feeder interface connector, or improper connector insertion.	Reinsert the connector. Also check for continuity within the connector harness. If none, remedy or replace the harness.
		Defective engine PWB.	Replace the engine PWB (See page 1-5-30).
0600	**Expanded memory (DIMM) installing error** The expansion memory modules (DIMM) are not correctly mounted.	Improper installation expanded memory (DIMM).	Check the installation of the expanded memory (DIMM) and remedy if necessary.
0610	**Expanded memory (DIMM) error** The expansion memory modules (DIMM) mounted on the main PWB does not operate correctly.	Defective expanded memory (DIMM).	Replace the expanded memory (DIMM) (See page 1-2-5).
		Defective main PWB.	Replace the main PWB (See page 1-5-29).

Code	Contents	Remarks	
		Causes	Check procedures/corrective measures
0640	**Hard disk error**	Defective hard disk.	Replace the hard disk (See page 1-2-7).
		Defective main PWB.	Replace the main PWB (See page 1-5-29).
0930	**I2C bus error**	Defective RFID.	Replace the RFID.
		Defective drum PWB (EEPROM).	Replace the drum unit (See page 1-5-15).
		Defective engine PWB (EEPROM).	Replace the engine PWB (EEPROM) (See page 1-5-30).
		Defective main PWB.	Replace the main PWB (See page 1-5-29).
		Defective engine PWB.	Replace the engine PWB (See page 1-5-30).
1010	**Lift motor error** When the lift motor is driven, the lift motor over-current detection signal is detected continuously for 50 times (5 s) at 100 ms intervals. After the lift motor is driven, the ON status of lift limit sensor cannot be detected for 8 seconds. The cassette installed confirmation message is displayed on the printer operation panel, and even if the cassette is opened and closed, the cassette installed confirmation message is displayed 5 times successively.	Defective bottom plate elevation mechanism in the cassette.	Check to see if the bottom plate can move smoothly and repair it if any problem is found.
		Defective drive transmission system of the lift motor.	Check if the rollers and gears rotate smoothly. If not, grease the bushings and gears. Check for broken gears and replace if any.
		Defective lift motor.	Replace the lift motor.
		Defective engine PWB.	Replace the engine PWB (See page 1-5-30).
1020 **1030** **1040**	**PF lift motor error** **(Option paper feeder)** When the PF lift motor is driven, the PF lift motor over-current detection signal is detected continuously for 50 times (5 s) at 100 ms intervals. After the PF lift motor is driven, the ON status of PF lift limit sensor cannot be detected for 8 seconds. The cassette installed confirmation message is displayed on the printer operation panel, and even if the cassette is opened and closed, the cassette installed confirmation message is displayed 5 times successively. 1020: Paper feeder 1 1030: Paper feeder 2 1040: Paper feeder 3	Defective harness between PF lift motor and PF main PWB (YC7), or improper connector insertion.	Reinsert the connector. Also check for continuity within the connector harness. If none, remedy or replace the harness. (Refer to the service manual for the paper feeder).
		Defective bottom plate elevation mechanism in the cassette.	Check to see if the bottom plate can move smoothly and repair it if any problem is found.(Refer to the service manual for the paper feeder).
		Defective drive transmission system of the PF lift motor.	Check if the gears rotate smoothly. If not, grease the bushings and gears. Check for broken gears and replace if any.(Refer to the service manual for the paper feeder).
		Defective PF lift motor.	Replace the PF lift motor. (Refer to the service manual for the paper feeder).
		Defective PF lift limit sensor.	Replace the PF main PWB (Refer to the service manual for the paper feeder).
		Defective PF cassette size switch.	Replace the PF cassette size switch.(Refer to the service manual for the paper feeder).
		Defective PF main PWB.	Replace the PF main PWB (Refer to the service manual for the paper feeder).
		Defective engine PWB.	Replace the engine PWB (See page 1-5-30).

Code	Contents	Remarks	
		Causes	Check procedures/corrective measures
1500 **1520** **1540**	**PF warm air heater (upper blower) high temperature error*** **(Option paper feeder)** A temperature higher than 85°C/185°F is detected. *: Multi purpose feeder only 1500: Paper feeder 1 1520: Paper feeder 2 1540: Paper feeder 3	The inlet of upper blower assembly is blocked by paper pieces or the like.	Check visually and remove it, if any (Refer to the service manual for the paper feeder).
		Defective harness between PF warm air fan motor 2 and PF main PWB (YC11), or improper connector insertion.	Reinsert the connector. Also check for continuity within the connector harness. If none, remedy or replace the harness. (Refer to the service manual for the paper feeder).
		Shorted PF thermistor 2.	Replace the PF thermistor 2 (Refer to the service manual for the paper feeder).
		Defective PF warm air fan motor 2.	Replace the PF warm air fan motor 2 (Refer to the service manual for the paper feeder).
		Defective PF main PWB.	Replace the PF main PWB (Refer to the service manual for the paper feeder).
		Defective engine PWB.	Replace the engine PWB (See page 1-5-30).
1510 **1530** **1550**	**PF warm air heater (side blower) high temperature error*** **(Option paper feeder)** A temperature higher than 85°C/185°F is detected. *: Multi purpose feeder only 1510: Paper feeder 1 1530: Paper feeder 2 1550: Paper feeder 3	The inlet of side blower assembly is blocked by paper pieces or the like.	Check visually and remove it, if any (Refer to the service manual for the paper feeder).
		Defective harness between PF warm air fan motor 1 and PF main PWB (YC11), or improper connector insertion.	Reinsert the connector. Also check for continuity within the connector harness. If none, remedy or replace the harness. (Refer to the service manual for the paper feeder).
		Shorted PF thermistor 1.	Replace the PF thermistor 1. (Refer to the service manual for the paper feeder).
		Defective PF warm air fan motor 1.	Replace the PF warm air fan motor 1 (Refer to the service manual for the paper feeder).
		Defective PF main PWB.	Replace the PF main PWB (Refer to the service manual for the paper feeder).
		Defective engine PWB.	Replace the engine PWB (See page 1-5-30).

Code	Contents	Remarks	
		Causes	Check procedures/corrective measures
1600 **1620** **1640**	**PF warm air heater (upper blower) low temperature error*** **(Option paper feeder)** An external temperature higher than +5°C/+41°F is not detected when one minute elapses after PF warm air heater 2 is turned on. *: Multi purpose feeder only 1600: Paper feeder 1 1620: Paper feeder 2 1640: Paper feeder 3	Defective harness between PF warm air heater 2 and PF warm air heater driver PWB (YC2), or improper connector insertion.	Reinsert the connector. Also check for continuity within the connector harness. If none, remedy or replace the harness. (Refer to the service manual for the paper feeder).
		Defective harness between PF warm air heater driver PWB (YC3) and PF main PWB (YC13), or improper connector insertion.	Reinsert the connector. Also check for continuity within the connector harness. If none, remedy or replace the harness. (Refer to the service manual for the paper feeder).
		Defective harness between PF thermistor 2 and PF main PWB (YC12), or improper connector insertion.	Reinsert the connector. Also check for continuity within the connector harness. If none, remedy or replace the harness. (Refer to the service manual for the paper feeder).
		PF thermistor 2 installed incorrectly.	Check the installation of the PF thermistor 2 and remedy if necessary (Refer to the service manual for the paper feeder).
		Defective PF thermistor 2.	Replace the PF thermistor 2 (Refer to the service manual for the paper feeder).
		PF thermal cutout 2 triggered.	Replace the PF thermal cutout 2 (Refer to the service manual for the paper feeder).
		Broken PF warm air heater 2.	Replace the PF warm air heater 2 (Refer to the service manual for the paper feeder).
		Defective PF warm air heater driver PWB.	Replace the PF warm air driver PWB (Refer to the service manual for the paper feeder).
		Defective PF main PWB.	Replace the PF main PWB (Refer to the service manual for the paper feeder).
		Defective engine PWB.	Replace the engine PWB (See page 1-5-30).

Code	Contents	Remarks	
		Causes	Check procedures/corrective measures
1610 **1630** **1650**	**PF warm air heater (side blower) error*** **(Option paper feeder)** An external temperature higher than +5°C/+41°F is not detected when one minute elapses after PF warm air heater 2 is turned on. *: Multi purpose feeder only 1610: Paper feeder 1 1630: Paper feeder 2 1650: Paper feeder 3	Defective harness between PF warm air heater 1 and PF warm air heater driver PWB (YC1), or improper connector insertion.	Reinsert the connector. Also check for continuity within the connector harness. If none, remedy or replace the harness. (Refer to the service manual for the paper feeder).
		Defective harness between PF warm air heater driver PWB (YC3) and PF main PWB (YC13), or improper connector insertion.	Reinsert the connector. Also check for continuity within the connector harness. If none, remedy or replace the harness.(Refer to the service manual for the paper feeder).
		Defective harness between PF thermistor 2 and PF main PWB (YC12), or improper connector insertion.	Reinsert the connector. Also check for continuity within the connector harness. If none, remedy or replace the harness. (Refer to the service manual for the paper feeder).
		PF thermistor 1 installed incorrectly.	Check the installation of the PF thermistor 1 and remedy if necessary (Refer to the service manual for the paper feeder).
		Defective PF thermistor 1.	Replace the PF thermistor 1 (Refer to the service manual for the paper feeder).
		PF thermostat 1 triggered.	Replace the PF thermostat 1 (Refer to the service manual for the paper feeder).
		Broken PF warm air heater 1.	Replace the PF warm air heater 1 (Refer to the service manual for the paper feeder).
		Defective PF warm air heater driver PWB.	Replace the PF warm air driver PWB (Refer to the service manual for the paper feeder).
		Defective PF main PWB.	Replace the PF main PWB (Refer to the service manual for the paper feeder).
		Defective engine PWB.	Replace the engine PWB (See page 1-5-30).

Code	Contents	Remarks	
		Causes	Check procedures/corrective measures
2102	**Developing motor MCY error** The ready signal cannot be detected within 5 seconds after the developing motor MCY turns on.	Defective harness between developing motor MCY and engine PWB (YC27), or improper connector insertion.	Reinsert the connector. Also check for continuity within the connector harness. If none, remedy or replace the harness.
		Defective drive transmission system of the developing motor MCY.	Check if the gears rotate smoothly. If not, grease the bushings and gears. Check for broken gears and replace if any.
		Defective developing motor MCY.	Replace the developing motor MCY.
		Defective engine PWB.	Replace the engine PWB (See page 1-5-30).
2250	**Main charger cleaning motor error** When the main charger cleaning motor is driven, the main charger cleaning motor over-current detection signal is detected continuously for 50 times (5 s) at 100 ms intervals.	Defective harness between main charger cleaning motor and engine PWB (YC36), or improper connector insertion.	Reinsert the connector. Also check for continuity within the connector harness. If none, remedy or replace the harness.
		Defective drive transmission system of the main charger cleaning motor.	Check if the rollers and gears rotate smoothly. If not, grease the bushings and gears. Check for broken gears and replace if any.
		Defective main charger cleaning motor.	Replace the main charger cleaning motor.
		Defective engine PWB.	Replace the engine PWB (See page 1-5-30).
2500	**Paper feed motor error** The main motor ready input is not given for 5 seconds during the main motor is ON.	Defective harness between paper feed motor and engine PWB (YC3/YC4), or improper connector insertion.	Reinsert the connector. Also check for continuity within the connector harness. If none, remedy or replace the harness.
		Defective drive transmission system of the paper feed motor.	Check if the rollers and gears rotate smoothly. If not, grease the bushings and gears. Check for broken gears and replace if any.
		Defective paper feed motor.	Replace the paper feed motor.
		Defective engine PWB.	Replace the engine PWB (See page 1-5-30).

Code	Contents	Remarks	
		Causes	Check procedures/corrective measures
2610 **2620** **2630**	**PF paper feed motor error (Option paper feeder)** The PF paper feed motor of paper feeder 1 ready input is not given for 2 seconds during the PF paper feed motor is ON. 2610: Paper feeder 1 2620: Paper feeder 2 2630: Paper feeder 3	Defective harness between PF paper feed motor and PF main PWB (YC6), or improper connector insertion.	Reinsert the connector. Also check for continuity within the connector harness. If none, remedy or replace the harness. (Refer to the service manual for the paper feeder).
		Defective PF paper feed motor drive transmission system.	Check if the gears rotate smoothly. If not, grease the bushings and gears. Check for broken gears and replace if any. (Refer to the service manual for the paper feeder).
		Defective PF main motor.	Replace the PF main motor.
		Defective PF main PWB.	Replace the PF main PWB (Refer to the service manual for the paper feeder).
		Defective printer's engine PWB.	Replace the printer's engine PWB (Refer to the service manual for the printer).
2830	**Developing motor K error** The ready signal cannot be detected within 5 seconds after the developing motor K turns on.	Defective harness between developing motor K and engine PWB (YC26), or improper connector insertion.	Reinsert the connector. Also check for continuity within the connector harness. If none, remedy or replace the harness (Refer to the service manual for the paper feeder).
		Defective drive transmission system of the developing motor K.	Check if the gears rotate smoothly. If not, grease the bushings and gears. Check for broken gears and replace if any.
		Improper installation intermediate transfer unit.	Check the installation of the intermediate transfer unit and reinstall them if necessary (See page 1-5-17).
		Defective developing motor K.	Replace the developing motor K.
		Defective engine PWB.	Replace the engine PWB (See page 1-5-30).
4001	**Polygon motor YK error** The polygon motor YK ready input is not given for 10 seconds during the polygon motor YK is ON.	Defective harness between polygon motor YK and engine PWB (YC29), or improper connector insertion.	Reinsert the connector. Also check for continuity within the connector harness. If none, remedy or replace the harness.
		Defective laser scanner unit YK.	Replace the laser scanner unit YK (See page 1-5-38).
		Defective engine PWB.	Replace the engine PWB (See page 1-5-30).

Code	Contents	Remarks	
		Causes	Check procedures/corrective measures
4002	**Polygon motor MC error** The polygon motor MC ready input is not given for 10 seconds during the polygon motor MC is ON.	Defective harness between polygon motor MC and engine PWB (YC30), or improper connector insertion.	Reinsert the connector. Also check for continuity within the connector harness. If none, remedy or replace the harness.
		Defective laser scanner unit MC.	Replace the laser scanner unit MC (See page 1-5-38).
		Defective engine PWB.	Replace the engine PWB (See page 1-5-30).
4201	**Laser output error (Black)** The pin photo signal (PDN) is not output from PD PWB K for one second while laser is emitted.	Defective harness between APC PWB K and engine PWB (YC29), or improper connector insertion.	Reinsert the connector. Also check for continuity within the connector harness. If none, remedy or replace the harness.
		Defective APC PWB K.	Replace the laser scanner unit YK (See page 1-5-38).
		Defective PD PWB K.	Replace the laser scanner unit YK (See page 1-5-38).
		Defective engine PWB.	Replace the engine PWB (See page 1-5-30).
4202	**Laser output error (Cyan)** The pin photo signal (PDN) is not output from PD PWB C for one second while laser is emitted.	Defective harness between APC PWB C and engine PWB (YC30), or improper connector insertion.	Reinsert the connector. Also check for continuity within the connector harness. If none, remedy or replace the harness.
		Defective APC PWB C.	Replace the laser scanner unit MC (See page 1-5-38).
		Defective PD PWB C.	Replace the laser scanner unit MC (See page 1-5-38).
		Defective engine PWB.	Replace the engine PWB (See page 1-5-30).
4203	**Laser output error (Magenta)** The pin photo signal (PDN) is not output from PD PWB M for one second while laser is emitted.	Defective harness between APC PWB M and engine PWB (YC30), or improper connector insertion.	Reinsert the connector. Also check for continuity within the connector harness. If none, remedy or replace the harness.
		Defective APC PWB M.	Replace the laser scanner unit MC (See page 1-5-38).
		Defective PD PWB M.	Replace the laser scanner unit MC (See page 1-5-38).
		Defective engine PWB.	Replace the engine PWB (See page 1-5-30).

Code	Contents	Remarks	
		Causes	Check procedures/corrective measures
4204	**Laser output error (Yellow)** The pin photo signal (PDN) is not output from PD PWB Y for one second while laser is emitted.	Defective harness between APC PWB Y and engine PWB (YC29), or improper connector insertion.	Reinsert the connector. Also check for continuity within the connector harness. If none, remedy or replace the harness.
		Defective APC PWB Y.	Replace the laser scanner unit YK (See page 1-5-38).
		Defective PD PWB Y.	Replace the laser scanner unit YK (See page 1-5-38).
		Defective engine PWB.	Replace the engine PWB (See page 1-5-30).
4600	**LSU cleaning motor error** When the LSU cleaning motor is driven, the LSU cleaning motor over-current detection signal is detected continuously for 50 times (5 s) at 100 ms intervals.	Defective harness between LSU cleaning motor and engine PWB (YC37), or improper connector insertion.	Reinsert the connector. Also check for continuity within the connector harness. If none, remedy or replace the harness.
		Defective drive transmission system of the LSU cleaning motor.	Check if the rollers and gears rotate smoothly. If not, grease the bushings and gears. Check for broken gears and replace if any.
		Defective LSU cleaning motor.	Replace the LSU cleaning motor.
		Defective engine PWB.	Replace the engine PWB (See page 1-5-30).
4700	**VIDEO ASIC device error**	Faulty connection of the connector between the main PWB and engine PWB.	Check the installation of the main PWB and engine PWB and reinstall them if necessary (See page 1-5-29 and 1-5-30).
		Defective main PWB.	Replace the main PWB (See page 1-5-29).
		Defective engine PWB.	Replace the engine PWB (See page 1-5-30).

Code	Contents	Remarks	
		Causes	Check procedures/corrective measures
5301	**Broken eraser lamp K wire** When the eraser lamp K is driven, the eraser lamp K over-current detection signal is detected continuously for 10 times (1 s) at 100 ms intervals.	Defective harness between drum unit K and drum relay PWB (YC2/YC3), or improper connector insertion.	Reinsert the connector. Also check for continuity within the connector harness. If none, remedy or replace the harness.
		Defective harness between drum relay PWB (YC1) and engine PWB (YC34), or improper connector insertion.	Reinsert the connector. Also check for continuity within the connector harness. If none, remedy or replace the harness.
		Defective eraser lamp K.	Replace the drum unit K. (See page 1-5-15).
		Defective engine PWB.	Replace the engine PWB (See page 1-5-30).
5302	**Broken eraser lamp C wire** When the eraser lamp C is driven, the eraser lamp C over-current detection signal is detected continuously for 10 times (1 s) at 100 ms intervals.	Defective harness between drum unit C and drum relay PWB (YC8/YC9), or improper connector insertion.	Reinsert the connector. Also check for continuity within the connector harness. If none, remedy or replace the harness.
		Defective harness between drum relay PWB (YC1) and engine PWB (YC34), or improper connector insertion.	Reinsert the connector. Also check for continuity within the connector harness. If none, remedy or replace the harness.
		Defective eraser lamp C.	Replace the drum unit C (See page 1-5-15).
		Defective engine PWB.	Replace the engine PWB (See page 1-5-30).
5303	**Broken eraser lamp M wire** When the eraser lamp M is driven, the eraser lamp M over-current detection signal is detected continuously for 10 times (1 s) at 100 ms intervals.	Defective harness between drum unit M and drum relay PWB (YC11/YC12), or improper connector insertion.	Reinsert the connector. Also check for continuity within the connector harness. If none, remedy or replace the harness.
		Defective harness between drum relay PWB (YC1) and engine PWB (YC34), or improper connector insertion.	Reinsert the connector. Also check for continuity within the connector harness. If none, remedy or replace the harness.
		Defective eraser lamp M.	Replace the drum unit M (See page 1-5-15).
		Defective engine PWB.	Replace the engine PWB (See page 1-5-30).

Code	Contents	Remarks	
		Causes	Check procedures/corrective measures
5304	**Broken eraser lamp Y wire** When the eraser lamp Y is driven, the eraser lamp Y over-current detection signal is detected continuously for 10 times (1 s) at 100 ms intervals.	Defective harness between drum unit Y and drum relay PWB (YC5/YC6), or improper connector insertion.	Reinsert the connector. Also check for continuity within the connector harness. If none, remedy or replace the harness.
		Defective harness between drum relay PWB (YC1) and engine PWB (YC34), or improper connector insertion.	Reinsert the connector. Also check for continuity within the connector harness. If none, remedy or replace the harness.
		Defective eraser lamp Y.	Replace the drum unit Y (See page 1-5-15).
		Defective engine PWB.	Replace the engine PWB (See page 1-5-30).
6000	**Broken fuser heater lamp wire** The detected fuser thermistor temperature does not rise 1°C/1.8°F after the fuser heater lamp has been turned on continuously for 10 seconds in warming up. The fuser temperature does not reach 100°C/212°F after the fuser heater lamp has been turned on continuously for 40 seconds in warming up. The detected temperature of fuser thermistor does not reach the specified temperature (ready indication temperature) after fuser heater lamp has been turned on continuously for 90 seconds in warming up. The detected temperature of fuser thermistor 2 does not rise 1°C/1.8°F after fuser heater lamp has been turned on continuously for 10 seconds during printing.	Defective harness between fuser thermistor and paper exit PWB (YC4), or improper connector insertion.	Reinsert the connector. Also check for continuity within the connector harness. If none, remedy or replace the harness.
		Defective harness between paper exit PWB (YC1) and engine PWB (YC20), or improper connector insertion.	Reinsert the connector. Also check for continuity within the connector harness. If none, remedy or replace the harness.
		Fuser thermistor installed incorrectly.	Replace the fuser unit (See page 1-5-26).
		Fuser thermal cut-out triggered.	Replace the fuser unit (See page 1-5-26).
		Fuser heater lamp installed incorrectly.	Replace the fuser unit (See page 1-5-26).
		Broken fuser heater lamp wire.	Replace the fuser unit (See page 1-5-26).
		Defective engine PWB.	Replace the engine PWB (See page 1-5-30).

Code	Contents	Remarks	
		Causes	Check procedures/corrective measures
6020	**Abnormally high temperature fuser heater lamp** The fuser thermistor detects a temperature higher than 240°C/464°F. By the activation of the high temperature error detection circuit (230°C/446°F or more) of fuser thermistor, the illumination of fuser heater lamp was forcibly turned off and 10 seconds has elapsed.	Shorted fuser thermistor.	Replace the fuser unit (See page 1-5-26).
		Defective engine PWB.	Replace the engine PWB (See page 1-5-30).
6030	**Broken fuser thermistor wire** Input from fuser thermistor is 3 or less (A/D value) continuously for 1.1 second (11 ms × 100 times).	Defective harness between fuser thermistor and paper exit PWB (YC4), or improper connector insertion.	Reinsert the connector. Also check for continuity within the connector harness. If none, remedy or replace the harness.
		Defective harness between paper exit PWB (YC1) and engine PWB (YC20), or improper connector insertion.	Reinsert the connector. Also check for continuity within the connector harness. If none, remedy or replace the harness.
		Broken fuser thermistor wire.	Replace the fuser unit (See page 1-5-26).
		Fuser thermistor installed incorrectly.	Replace the fuser unit (See page 1-5-26).
		Fuser thermal cut-out triggered.	Replace the fuser unit (See page 1-5-26).
		Fuser heater lamp installed incorrectly.	Replace the fuser unit (See page 1-5-26).
		Broken fuser heater lamp wire.	Replace the fuser unit (See page 1-5-26).
		Defective engine PWB.	Replace the engine PWB (See page 1-5-30).
6400	**Zero cross signal error** The zero cross signal does not reach the engine PWB for specified time.	Defective harness between power source PWB (YC103) and engine PWB (YC19), or improper connector insertion.	Reinsert the connector. Also check for continuity within the connector harness. If none, remedy or replace the harness.
		Defective power source PWB.	Replace the power source PWB (See page 1-5-27).
		Defective engine PWB.	Replace the engine PWB (See page 1-5-30).

Code	Contents	Remarks	
		Causes	Check procedures/corrective measures
7001	**Toner motor K error** When the toner motor K is driven, the toner motor K over-current detection signal is detected continuously for 50 times (5 s) at 100 ms intervals.	Defective harness between toner motor K and engine PWB (YC22), or improper connector insertion.	Reinsert the connector. Also check for continuity within the connector harness. If none, remedy or replace the harness.
		Defective drive transmission system of the toner motor K.	Check if the gears rotate smoothly. If not, grease the bushings and gears. Check for broken gears and replace if any.
		Defective toner motor K.	Replace the toner motor K.
		Defective engine PWB.	Replace the engine PWB (See page 1-5-30).
7002	**Toner motor C error** When the toner motor C is driven, the toner motor C over-current detection signal is detected continuously for 50 times (5 s) at 100 ms intervals.	Defective harness between toner motor C and engine PWB (YC24), or improper connector insertion.	Reinsert the connector. Also check for continuity within the connector harness. If none, remedy or replace the harness.
		Defective drive transmission system of the toner motor C.	Check if the gears rotate smoothly. If not, grease the bushings and gears. Check for broken gears and replace if any.
		Defective toner motor C.	Replace the toner motor C.
		Defective engine PWB.	Replace the engine PWB (See page 1-5-30).
7003	**Toner motor M error** When the toner motor M is driven, the toner motor M over-current detection signal is detected continuously for 50 times (5 s) at 100 ms intervals.	Defective harness between toner motor M and engine PWB (YC25), or improper connector insertion.	Reinsert the connector. Also check for continuity within the connector harness. If none, remedy or replace the harness.
		Defective drive transmission system of the toner motor M.	Check if the gears rotate smoothly. If not, grease the bushings and gears. Check for broken gears and replace if any.
		Defective toner motor M.	Replace the toner motor M.
		Defective engine PWB.	Replace the engine PWB (See page 1-5-30).

Code	Contents	Remarks	
		Causes	Check procedures/corrective measures
7004	**Toner motor Y error** When the toner motor Y is driven, the toner motor Y over-current detection signal is detected continuously for 50 times (5 s) at 100 ms intervals.	Defective harness between toner motor Y and engine PWB (YC23), or improper connector insertion.	Reinsert the connector. Also check for continuity within the connector harness. If none, remedy or replace the harness.
		Defective drive transmission system of the toner motor Y.	Check if the gears rotate smoothly. If not, grease the bushings and gears. Check for broken gears and replace if any.
		Defective toner motor Y.	Replace the toner motor Y.
		Defective engine PWB.	Replace the engine PWB (See page 1-5-30).
7401	**Developing unit K non-installing error** No density detection signal is output from toner sensor K in developing unit K.	Faulty connection of the connector between the developing PWB K and drum relay PWB.	Check the installation of the developing unit K and drum relay PWB and reinstall them if necessary (See page 1-5-13).
		Defective harness between drum relay PWB (YC1) and engine PWB (YC34), or improper connector insertion.	Reinsert the connector. Also check for continuity within the connector harness. If none, remedy or replace the harness.
		Defective toner sensor K.	Replace the developing unit K (See page 1-5-13).
		Defective engine PWB.	Replace the engine PWB (See page 1-5-30).
7402	**Developing unit C non-installing error** No density detection signal is output from toner sensor C in developing unit C.	Faulty connection of the connector between the developing PWB C and drum relay PWB.	Check the installation of the developing unit C and drum relay PWB and reinstall them if necessary (See page 1-5-13).
		Defective harness between drum relay PWB (YC1) and engine PWB (YC34), or improper connector insertion.	Reinsert the connector. Also check for continuity within the connector harness. If none, remedy or replace the harness.
		Defective toner sensor C.	Replace the developing unit C (See page 1-5-13).
		Defective engine PWB.	Replace the engine PWB (See page 1-5-30).

Code	Contents	Remarks	
		Causes	Check procedures/corrective measures
7403	**Developing unit M non-installing error** No density detection signal is output from toner sensor M in developing unit M.	Faulty connection of the connector between the developing PWB M and drum relay PWB.	Check the installation of the developing unit M and drum relay PWB and reinstall them if necessary (See page 1-5-13).
		Defective harness between drum relay PWB (YC1) and engine PWB (YC34), or improper connector insertion.	Reinsert the connector. Also check for continuity within the connector harness. If none, remedy or replace the harness.
		Defective toner sensor M.	Replace the developing unit M (See page 1-5-13).
		Defective engine PWB.	Replace the engine PWB (See page 1-5-30).
7404	**Developing unit Y non-installing error** No density detection signal is output from toner sensor Y in developing unit Y.	Faulty connection of the connector between the developing PWB Y and drum relay PWB.	Check the installation of the developing unit Y and drum relay PWB and reinstall them if necessary (See page 1-5-13).
		Defective harness between drum relay PWB (YC1) and engine PWB (YC34), or improper connector insertion.	Reinsert the connector. Also check for continuity within the connector harness. If none, remedy or replace the harness.
		Defective toner sensor Y.	Replace the developing unit Y (See page 1-5-13).
		Defective engine PWB.	Replace the engine PWB (See page 1-5-30).
7411	**Drum unit K non-installing error** The EEPROM of drum PWB K does not communicate normally.	Faulty connection of the connector between the drum PWB K and drum relay PWB.	Check the installation of the drum unit K and drum relay PWB and reinstall them if necessary (See page 1-5-15).
		Defective harness between drum relay PWB (YC1) and engine PWB (YC34), or improper connector insertion.	Reinsert the connector. Also check for continuity within the connector harness. If none, remedy or replace the harness.
		Installation of incompatible drum unit K.	Install drum unit K compatible with the specifications to the printer.
		Defective drum PWB K.	Replace the drum unit Y (See page 1-5-15).
		Defective engine PWB.	Replace the engine PWB (See page 1-5-30).

Code	Contents	Remarks	
		Causes	Check procedures/corrective measures
7412	**Drum unit C non-installing error** The EEPROM of drum PWB C does not communicate normally. Incompatible drum unit C is installed.	Faulty connection of the connector between the drum PWB C and drum relay PWB.	Check the installation of the drum unit C and drum relay PWB and reinstall them if necessary (See page 1-5-15).
		Defective harness between drum relay PWB (YC1) and engine PWB (YC34), or improper connector insertion.	Reinsert the connector. Also check for continuity within the connector harness. If none, remedy or replace the harness.
		Installation of incompatible drum unit C.	Install drum unit C compatible with the specifications to the printer.
		Defective drum PWB C.	Replace the drum unit C (See page 1-5-15).
		Defective engine PWB.	Replace the engine PWB (See page 1-5-30).
7413	**Drum unit M non-installing error** The EEPROM of drum PWB M does not communicate normally. Incompatible drum unit M is installed.	Faulty connection of the connector between the drum PWB M and drum relay PWB.	Check the installation of the drum unit M and drum relay PWB and reinstall them if necessary (See page 1-5-15).
		Defective harness between drum relay PWB (YC1) and engine PWB (YC34), or improper connector insertion.	Reinsert the connector. Also check for continuity within the connector harness. If none, remedy or replace the harness.
		Installation of incompatible drum unit M.	Install drum unit M compatible with the specifications to the printer.
		Defective drum PWB M.	Replace the drum unit M (See page 1-5-15).
		Defective engine PWB.	Replace the engine PWB (See page 1-5-30).

Code	Contents	Remarks	
		Causes	Check procedures/corrective measures
7414	**Drum unit Y non-installing error** The EEPROM of drum PWB Y does not communicate normally. Incompatible drum unit Y is installed.	Faulty connection of the connector between the drum PWB Y and drum relay PWB.	Check the installation of the drum unit Y and drum relay PWB and reinstall them if necessary (See page 1-5-15).
		Defective harness between drum relay PWB (YC1) and engine PWB (YC34), or improper connector insertion.	Reinsert the connector. Also check for continuity within the connector harness. If none, remedy or replace the harness.
		Installation of incompatible drum unit Y.	Install drum unit Y compatible with the specifications to the printer.
		Defective drum PWB Y.	Replace the drum unit Y (See page 1-5-15).
		Defective engine PWB.	Replace the engine PWB (See page 1-5-30).
9530	**Backup data error** The serial number of the machine written on the EEPROM of the engine PWB differs with that is written on both the flash memory of the engine PWB and the EEPROM of the drum PWB as a backup.	Replacing both the engine PWB and the drum unit at the same time.	Check that the machine operates properly by reverting the engine controller and the drum unit to the old ones. To replace the engine PWB and the drum unit at the same time, turn on the printer after replacing either one. Check that the printer operates properly and then turn off the printer. Replace the other and turn on the printer to check that the printer operates properly. Be sure to replace one by one.
F0 F000	**Main PWB - Operation panel PWB communication error**	Defective main PWB.	Turn the power switch off/on to restart the printer. If the error is not resolved, replace main PWB (See page 1-5-29).
		Defective operation panel PWB.	Replace the operation panel PWB.
F010	**Main PWB checksum error**	Defective main PWB.	Turn the power switch off/on to restart the printer.
			In recovery mode, download the controller firmware using a CompactFlash card. In recovery mode, only a CompactFlash card is usable, not a USB memory.
			Replace main PWB (See page 1-5-29).
F020	**Main memory or expanded memory checksum error**	Defective main memory (RAM) on the main PWB.	Turn the power switch off/on to restart the printer. If the error is not resolved, replace main PWB (See page 1-5-29).
		Defective expansion memory module.	Replace the expansion memory module (See page 1-2-5).

Code	Contents	Remarks	
		Causes	Check procedures/corrective measures
F030	**Main PWB general failure**	Defective main PWB.	Turn the power switch off/on to restart the printer. If the error is not resolved, replace main PWB (See page 1-5-29).
F040	**Main PWB - Engine PWB communication error**	Faulty connection of the connector between the main PWB and engine PWB.	Check the installation of the main PWB and engine PWB and reinstall them if necessary (See page 1-5-29 and 1-5-30).
		Defective main PWB.	Turn the power switch off/on to restart the printer. If the error is not resolved, replace main PWB (See page 1-5-29).
		Defective engine PWB.	Replace engine PWB (See page 1-5-30).
F050	**Engine PWB ROM checksum error**	Some error may have occurred when downloading the firmware of the engine PWB.	Download the firmware of the engine PWB again using the memory card (See page 1-6-4).
		Defective engine PWB.	Turn the power switch off/on to restart the printer. If the error is not resolved, replace engine PWB (See page 1-5-30).
F186	**Main PWB video data control error**	Defective main PWB.	Turn the power switch off/on to restart the printer. If the error is not resolved, replace main PWB (See page 1-5-29).

1-4-3 Image formation problems

(1)No image appears (entirely white).

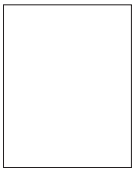

See page 1-4-22

(2)No image appears (entirely black).

See page 1-4-23

(3)A specific color is printed solid.

See page 1-4-23

(4)The back side gets dirty.

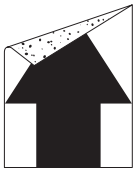

See page 1-4-23

(5)Image is too light.

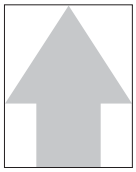

See page 1-4-24

(6)The background is colored.

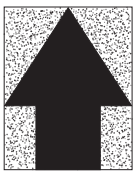

See page 1-4-24

(7)White streaks are printed vertically.

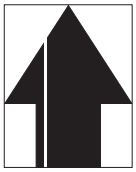

See page 1-4-25

(8)Black streaks are printed vertically.

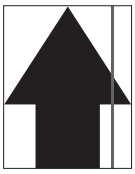

See page 1-4-25

(9)Streaks are printed horizontally.

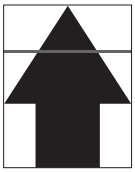

See page 1-4-25

(10)Spots are printed.

See page 1-4-25

(11)The leading edge of image begins to print too early or too late.

See page 1-4-26

(12)Paper is wrinkled.

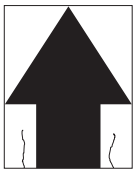

See page 1-4-26

(13)Offset occurs.

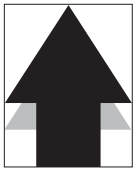

See page 1-4-26

(14)Part of image is missing.

See page 1-4-26

(15)Fusing is loose.

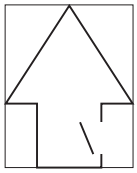

See page 1-4-27

(16)Colors are printed offset to each other.

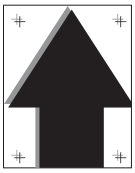

See page 1-4-27

(1) No image appears (entirely white).

Print example	Causes		Check procedures/corrective measures
	No transfer charging.	Defective harness between high voltage PWB and engine PWB (YC16), or improper connector insertion.	Reinsert the connector. Also check for continuity within the connector harness. If none, remedy or replace the harness.
		Defective high voltage PWB.	Replace the high voltage PWB (See page 1-5-35).
		Defective engine PWB.	Replace the engine PWB (See page 1-5-30).
	No laser beam output.	Defective laser scanner unit.	Replace the laser scanner unit YK and laser scanner unit MC (See page 1-5-38).
		Defective engine PWB.	Replace the engine PWB (See page 1-5-30).
	No developing bias output.	Defective harness between high voltage PWB and engine PWB (YC16), or improper connector insertion.	Reinsert the connector. Also check for continuity within the connector harness. If none, remedy or replace the harness.
		Defective high voltage PWB.	Replace the high voltage PWB (See page 1-5-35).
		Defective engine PWB.	Replace the engine PWB (See page 1-5-30).
	Defective driving system of developing unit.		Replace the developing unit (See page 1-5-13).
	Image synchronization signal failure.	Defective harness between engine PWB (YC31) and main PWB (YC6), or improper connector insertion.	Reinsert the connector. Also check for continuity within the connector harness. If none, remedy or replace the harness.

(2) No image appears (entirely black).

Print example	Causes		Check procedures/corrective measures
	No main charging.	Defective harness between high voltage PWB and engine PWB (YC16), or improper connector insertion.	Reinsert the connector. Also check for continuity within the connector harness. If none, remedy or replace the harness.
		Defective main charger unit.	Replace the drum unit (See page 1-5-15).
		Defective high voltage PWB.	Replace the high voltage PWB (See page 1-5-35).
		Defective engine PWB.	Replace the engine PWB (See page 1-5-30).
	The laser is activated simultaneously for all colors.	Defective laser scanner unit.	Replace the laser scanner unit YK and laser scanner unit MC (See page 1-5-38).

(3) A specific color is printed solid.

Print example	Causes	Check procedures/corrective measures
	Defective main charger unit which corresponds to the color causing the problem.	Check if the main charger unit is properly seated. If necessary, reseat it properly.
	Disconnected main charger wire.	Replace the main charger unit (See page 1-5-16, 1-5-16).
	Laser of laser scanner unit for solid color printing is ON. Defective laser scanner unit.	Replace the laser scanner unit YK and laser scanner unit MC (See page 1-5-38).

(4) The back side gets dirty.

Print example	Causes	Check procedures/corrective measures
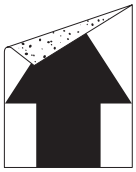	Dirty secondary transfer roller.	Clean the secondary transfer roller.
	Dirty paper conveying path.	Clean the paper conveying path.
	Dirty heat roller and press roller.	Clean the heat roller and press roller.

(5) Image is too light.

Print example	Causes		Check procedures/corrective measures
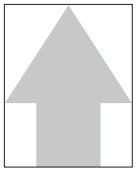	Defective developing bias output.	Defective developing unit.	Replace the developing unit for the color that causes an error.
		Defective high voltage PWB.	Replace the high voltage PWB (See page 1-5-35).
		Defective engine PWB.	Replace the engine (See page 1-5-30).
	Dirty drum.		Perform the drum surface refreshing (See page 1-3-12).
	Defective developing bias output.	Defective high voltage PWB.	Replace the high voltage PWB (See page 1-5-35).
		Defective engine PWB.	Replace the engine (See page 1-5-30).
	Defective color calibration.		Perform the color calibration (Refer to operation guide).
	Insufficient toner.		If the display shows the message requesting toner replenishment, replace the container.
	Insufficient agitation of toner container.		Shake the toner container vertically approximately 10 times.
	Paper damp.		Check the paper storage conditions, replace the paper.

(6) The background is colored.

Print example	Causes		Check procedures/corrective measures
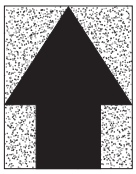	Defective color calibration.		Perform the color calibration (Refer to operation guide).
	Defective developing bias output.	Defective developing unit.	Check the four colors of image by using the test page of service mode. If the defect appears on a particular color, replace the developer for that color (See page 1-5-13).
		Defective high voltage PWB.	Replace the high voltage PWB (See page 1-5-35).
		Defective engine PWB.	Replace the engine (See page 1-5-30).
	Defective drum surface charging.	Defective drum unit.	Replace the drum unit (See page 1-5-15).
		Defective high voltage PWB.	Replace the high voltage PWB (See page 1-5-35).
		Defective engine PWB.	Replace the engine (See page 1-5-30).

(7) White streaks are printed vertically.

Print example	Causes	Check procedures/corrective measures
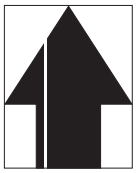	Foreign object in one of the developing units.	Check the image by using the test print of service mode. If the white line appears on a particular page, replace the developer for that color (See page 1-5-13).
	Adhesion of soiling to primary transfer belt.	Replace the intermediate transfer unit (See page 1-5-17).
	Dirty LSU protective glass.	Perform the LSU dust shield glass cleaning (See page 1-3-11).

(8) Black streaks are printed vertically.

Print example	Causes	Check procedures/corrective measures
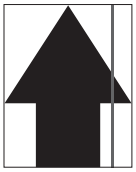	Dirty or flawed drum.	Perform the drum surface refreshing (See page 1-3-12). Flawed drum. Replace the drum unit (See page 1-5-15).
	Deformed or worn cleaning blade in the drum unit.	Replace the drum unit (See page 1-5-15).
	Worn primary transfer belt.	Replace the intermediate transfer unit (See page 1-5-17).
	Dirty main charger wire.	Perform the main charger cleaning (See page 1-3-11).

(9) Streaks are printed horizontally.

Print example	Causes	Check procedures/corrective measures
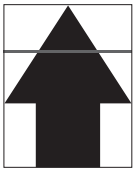	Flawed drum.	Replace the drum unit (See page 1-5-15).
	Dirty developing section.	Clean any part contaminated with toner in the developing section.
	Poor contact of grounding terminal of drum unit.	Check the installation of the drum unit. If it operates incorrectly, replace it (See page 1-5-15).

(10) Spots are printed.

Print example	Causes	Check procedures/corrective measures
	Dirty or flawed drum.	Perform the drum surface refreshing (See page 1-3-12). Flawed drum. Replace the drum unit (See page 1-5-15).
	Deformed or worn cleaning blade in the drum unit.	Replace the drum unit (See page 1-5-15).
	Flawed developing roller.	Replace the developing unit (See page 1-5-13).
	Dirty heat roller and press roller.	Clean the heat roller and press roller.

(11) The leading edge of image begins to print too early or too late.

Print example	Causes	Check procedures/corrective measures
	Paper feed clutch or registration clutch operating incorrectly.	Check the installation of the clutch. If it operates incorrectly, replace it.

(12) Paper is wrinkled.

Print example	Causes	Check procedures/corrective measures
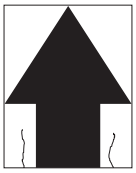	Paper curled.	Check the paper storage conditions, replace the paper.
	Paper damp.	Check the paper storage conditions, replace the paper.

(13) Offset occurs.

Print example	Causes	Check procedures/corrective measures
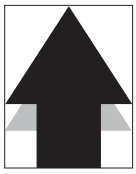	Deformed or worn cleaning blade in the drum unit.	Replace the drum unit.
	Defective intermediate transfer belt cleaning.	Replace the intermediate transfer unit (See page 1-5-17).
	Defective fuser unit.	Replace the fuser unit (See page 1-5-26).
	Wrong types of paper.	Check if the paper meets specifications. Replace paper.

(14) Part of image is missing.

Print example	Causes	Check procedures/corrective measures
	Paper damp.	Check the paper storage conditions, replace the paper.
	Paper creased.	Replace the paper.
	Drum condensation.	Perform the drum surface refreshing (See page 1-3-12).
	Dirty or flawed drum.	Perform the drum surface refreshing (See page 1-3-12). Flawed drum. Replace the drum unit (See page 1-5-15).
	Dirty transfer belt.	Clean the transfer belt. Replace the intermediate transfer unit (See page 1-5-17).
	Dirty transfer roller.	Clean the transfer roller. Replace the transfer roller unit (See page 1-5-20).

(15) Fusing is loose.

Print example	Causes	Check procedures/corrective measures
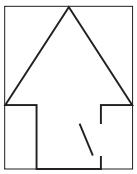	Wrong types of paper.	Check if the paper meets specifications, replace paper.
	Flawed heat roller or press roller.	Replace the heat roller and press roller (See page 1-5-26).

(16) Colors are printed offset to each other.

Print example	Causes	Check procedures/corrective measures
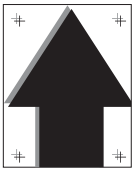	Defective calibration.	Perform the color calibration (Refer to operation guide).
	Slip the mirror position of laser scanner unit.	Perform the color registration. When the problem is not cleared, perform the manual color registration adjustment (Refer to operation guide).

1-4-4 Electric problems

Problem	Causes	Check procedures/corrective measures
(1)The machine does not operate when the power switch is turned on.	The power cord is not plugged in properly.	Check the contact between the power plug and the outlet.
	No electricity at the power outlet.	Measure the input voltage.
	Broken power cord.	Check for continuity. If none, replace the cord.
	Defective power switch.	Check for continuity across the contacts. If none, replace the power switch.
	Defective power source PWB.	Replace the power source PWB (See page 1-5-27).
(2)Drum motor M/C/Y/K, duplex motor and fuser motor do not operate.	Defective harness or improper connector insertion.	Reinsert the connector. Also check for continuity within the connector harness. If none, remedy or replace the harness. Drum motor M/C/Y/K - Engine PWB (YC18) Duplex motor - Engine PWB (YC17) Fuser motor - Engine PWB (YC39)
	Broken the gear.	Check visually and replace the gear if necessary.
	Defective motor.	Replace the motor.
	Defective engine PWB.	Replace the engine PWB (See page 1-5-30).
(3)Power source fan motor, ozone fan motor, developing fan motor1/2 and fuser fan motor 1/2 do not operate.	Broken the fan motor coil.	Check for continuity across the coil. If none, replace the fan motor.
	Defective harness or improper connector insertion.	Reinsert the connector. Also check for continuity within the connector harness. If none, remedy or replace the harness. Power source fan motor - Engine PWB (YC8) Ozone fan motor - Engine PWB (YC11) Developing fan motor 1 - Engine PWB (YC10) Developing fan motor 2 - Engine PWB (YC41) Fuser fan motor 1 - Paper exit PWB (YC2) Fuser fan motor 2 - Engine PWB (YC44)
	Defective engine PWB.	Replace the engine PWB (See page 1-5-30).
(4)Paper feed clutch, registration clutch, developing clutch K, duplex clutch and intermediate clutch do not operate.	Broken clutch coil.	Check for continuity across the coil. If none, replace the clutch.
	Defective harness or improper connector insertion.	Reinsert the connector. Also check for continuity within the connector harness. If none, remedy or replace the harness. Paper feed clutch - Engine PWB (YC26) Registration clutch - Engine PWB (YC26) Developing clutch K - Engine PWB (YC26) Duplex clutch - Engine PWB (YC3) Intermediate clutch - Engine PWB (YC3)
	Defective engine PWB.	Replace the engine PWB (See page 1-5-30).
(5)MP paper feed solenoid, ID solenoid, duplex solenoid do not operate.	Broken solenoid coil.	Check for continuity across the coil. If none, replace the solenoid.
	Defective harness or improper connector insertion.	Reinsert the connector. Also check for continuity within the connector harness. If none, remedy or replace the harness. MP paper feed solenoid - Engine PWB (YC40) ID solenoid - Engine PWB (YC43) Duplex solenoid - Engine PWB (YC3)
	Defective engine PWB.	Replace the engine PWB (See page 1-5-30).

Problem	Causes	Check procedures/corrective measures
(6)Main charging is not performed.	Defective harness or improper connector insertion.	Reinsert the connector. Also check for continuity within the connector harness. If none, remedy or replace the high voltage PWB (See page 1-5-35). High voltage PWB - Engine PWB (YC16)
	Defective main charger unit	Replace the main charger unit (See page 1-5-16).
	Defective high voltage PWB.	Replace the high voltage PWB (See page 1-5-35).
	Defective engine PWB.	Replace the engine PWB (See page 1-5-30).
(7)No developing bias is output.	Defective harness or improper connector insertion.	Reinsert the connector. Also check for continuity within the connector harness. If none, remedy or replace the high voltage PWB (See page 1-5-35). High voltage PWB - Engine PWB (YC16)
	Defective high voltage PWB.	Replace the high voltage PWB (See page 1-5-35).
	Defective engine PWB.	Replace the engine PWB (See page 1-5-30).
(8)Transfer charging is not performed.	Defective harness or improper connector insertion.	Reinsert the connector. Also check for continuity within the connector harness. If none, remedy or replace the high voltage PWB (See page 1-5-35). High voltage PWB - Engine PWB (YC16)
	Defective high voltage PWB.	Replace the high voltage PWB (See page 1-5-35).
	Defective engine PWB.	Replace the engine PWB (See page 1-5-30).
(9)The message requesting paper to be loaded is shown when paper is present in the cassette.	Defective paper sensor 1/2.	Replace the engine PWB (See page 1-5-30).
	Broken paper sensor 1/2 actuator.	Check the bending of the actuator lever of the paper sensor 1/2 if there is trouble, remedy or replace.
	Defective engine PWB.	Replace the engine PWB (See page 1-5-30).
(10)The message requesting paper to be loaded is shown when paper is present in the MP tray.	Defective harness or improper connector insertion.	Reinsert the connector. Also check for continuity within the connector harness. If none, remedy or replace the harness. MP tray sensor - Engine PWB (YC21)
	Defective MP tray sensor.	Replace the MP tray sensor.
	Defective engine PWB.	Replace the engine PWB (See page 1-5-30).
(11)The size of paper in the cassette is not displayed correctly.	Defective harness or improper connector insertion.	Reinsert the connector. Also check for continuity within the connector harness. If none, remedy or replace the harness. Cassette size switch - Engine PWB (YC9)
	Defective cassette size switch.	Replace the cassette size switch.
	Defective engine PWB.	Replace the engine PWB (See page 1-5-30).
(12)A paper jam in the paper feed section, paper conveying section, fuser section or duplex section is indicated when the power switch is turned on.	A piece of paper torn from copy paper is caught around registration switch, duplex conveying sensor or paper exit sensor.	Check and remove if any.
	Defective registration sensor or duplex conveying sensor.	Replace the registration sensor or duplex conveying sensor.
	Defective paper exit sensor.	Replace the paper exit PWB.
	Defective engine PWB.	Replace the engine PWB (See page 1-5-30).

Problem	Causes	Check procedures/corrective measures
(13)The message requesting front cover to be closed is displayed when the front cover is closed.	Defective harness or improper connector insertion.	Reinsert the connector. Also check for continuity within the connector harness. If none, remedy or replace the harness. Front cover open/close switch - Paper exit PWB (YC5) Paper exit PWB (YC1) - Engine PWB (YC20)
	Defective front cover open/close switch.	Replace the front cover open/close switch.
	Defective paper exit PWB.	Replace the paper exit PWB.
	Defective engine PWB.	Replace the engine PWB (See page 1-5-30).
(14)The message requesting cover to be closed is displayed when the top cover is closed.	Defective harness or improper connector insertion.	Reinsert the connector. Also check for continuity within the connector harness. If none, remedy or replace the harness. Interlock switch - Engine PWB (YC13)
	Defective interlock switch.	Replace the interlock switch.
	Defective engine PWB.	Replace the engine PWB (See page 1-5-30).
(15)The message requesting left cover to be closed is displayed when the left cover is closed.	Defective harness or improper connector insertion.	Reinsert the connector. Also check for continuity within the connector harness. If none, remedy or replace the harness. Left cover switch - Engine PWB (YC14)
	Defective left cover switch.	Replace the left cover switch.
	Defective engine PWB.	Replace the engine PWB (See page 1-5-30).
(16)Defective waste toner box detecting.	Defective harness or improper connector insertion.	Reinsert the connector. Also check for continuity within the connector harness. If none, remedy or replace the harness. Waste toner full sensor - Engine PWB (YC12)
	Defective waste toner full sensor.	Replace the waste toner full sensor.
	Defective engine PWB.	Replace the engine PWB (See page 1-5-30).
(17)Others.	Wiring is broken, shorted or makes poor contact.	Check for continuity. If none, repair.

1-4-5 Mechanical problems

Problem	Causes/check procedures	Corrective measures
(1)No primary paper feed.	Check if the surfaces of the paper feed roller, MP paper feed roller are dirty with paper powder.	Clean with isopropyl alcohol.
	Check if the paper feed roller, MP paper feed roller are deformed.	Check visually and replace any deformed rollers (See page 1-5-8 and 1-5-12).
	Defective paper feed clutch installation.	Check visually and remedy if necessary.
(2)No secondary paper feed.	Check if the surfaces of the upper and lower registration rollers are dirty with paper powder.	Clean with isopropyl alcohol.
	Defective registration clutch installation.	Check visually and remedy if necessary.
(3)Skewed paper feed.	Width guide in a cassette installed incorrectly.	Check the width guide visually and correct or replace if necessary.
	Deformed width guide in a cassette.	Repair or replace if necessary.
	Defective MP tray slider installation.	Check the slider visually and correct or replace if necessary.
	Deformed MP tray slider.	Check visually and replace any deformed slider.
(4)Multiple sheets of paper are fed at one time.	Check if the paper is curled.	Replace the paper.
	Paper is not placed correctly in the cassette.	Set the paper correctly.
	Check if the retard roller is worn.	Replace the retard roller pulley if it is worn.
	Check if the separator pad or MPF separation pad (duplex model only) is worn.	Replace the separator pad if it is worn (See page 1-5-10).
(5)Paper jams.	Check if the paper is excessively curled.	Replace the paper.
	Check if the contact between the front and rear registration rollers is correct.	Check visually and remedy if necessary.
	Check if the heat roller or press roller is extremely dirty or deformed.	Replace the fuser unit (See page 1-5-26).
(6)Toner drops on the paper conveying path.	Check if the drum unit or developing unit is extremely dirty.	Clean the drum unit or developing unit.
(7)Abnormal noise is heard.	Check if the pulleys, rollers and gears operate smoothly.	Grease the bearings and gears.
	Check if the following electromagnetic clutches are installed correctly:	Check visually and remedy if necessary.

This page is intentionally left blank.

1-5-1 Precautions for assembly and disassembly

(1) Precautions

Be sure to turn the power switch off and disconnect the power plug before starting disassembly.
When handling PWBs, do not touch connectors with bare hands or damage the PWB.
Use only the specified parts to replace the fuser unit thermostat. Never substitute electric wires, as the machine may be seriously damaged.
Do not touch any PWB containing ICs with bare hands or any object prone to static charge.
When removing the hook of the connector, be sure to release the hook.
Take care not to get the wire caught.

(2) Drum

Note the following when handling or storing the drum.
When removing the drum unit, never expose the drum surface to strong direct light.
Keep the drum at an ambient temperature between 0 °C/32 °F and 40 °C/104 °F and at a relative humidity not higher than 90% RH. Avoid abrupt changes in temperature and humidity.
Avoid exposure to any substance which is harmful to or may affect the quality of the drum.
Do not touch the drum surface with any object. Should it be touched by hands or stained with oil, clean it.

(3) Toner container

Store the toner container(s) in a cool, dark place.
Avoid direct light and high humidity.

(4) How to tell a genuine Kyocera Mita toner container

As a means of brand protection, the Kyocera Mita toner container utilizes an optical security technology to enable visual validation. A validation viewer is required to accomplish this.

Hold the validation viewer over the left side part of the brand protection seal on the toner container. Through each window of the validation viewer, the left side part of the seal should be seen as follows:

A black-colored band when seen through the left side window
A shiny or gold-colored band when seen through the right side window

The above will reveal that the toner container is a genuine Kyocera Mita branded toner container, otherwise, it is a counterfeit.

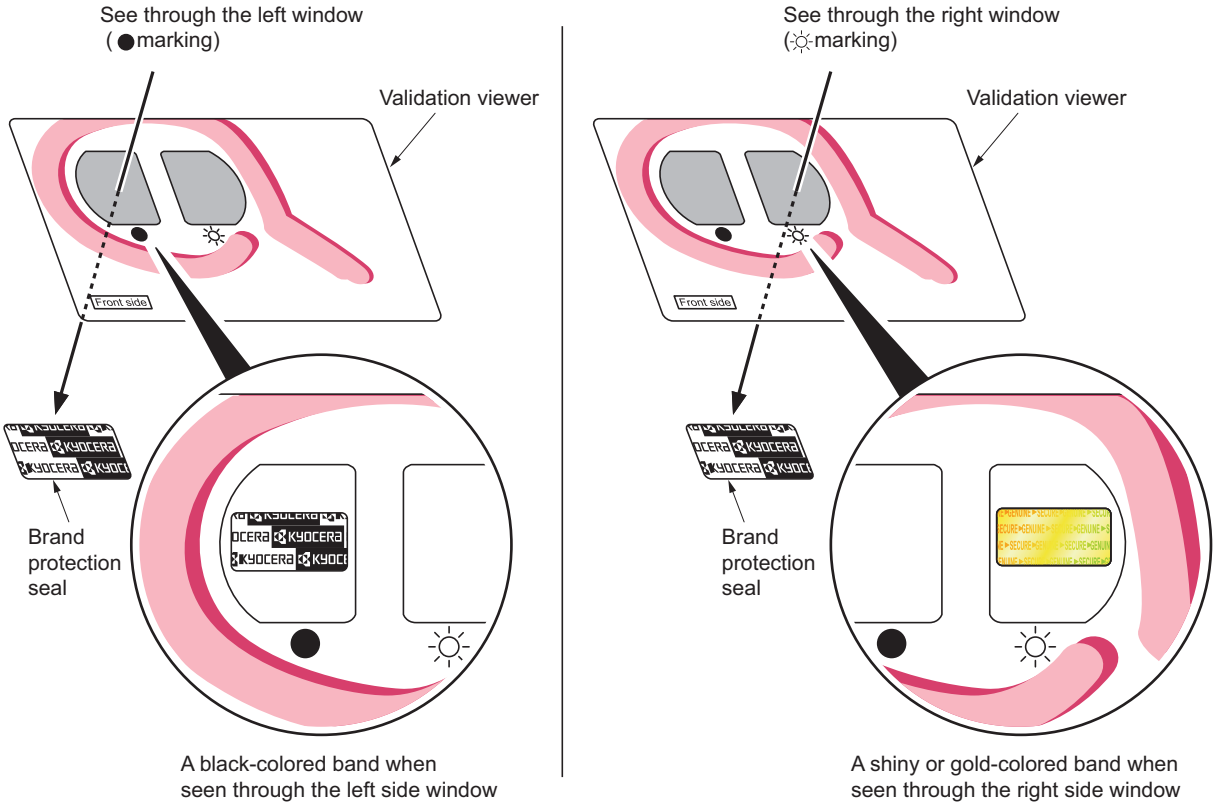

Figure 1-5-1

The brand protection seal has an incision as shown below to prohibit reuse.

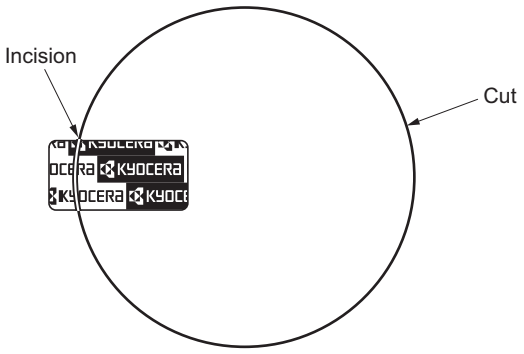

Figure 1-5-2

1-5-2 Outer covers

(1) Detaching and refitting the left rear cover, left upper cover and left front cover

Procedure

1. Open the left cover.
2. Remove the waste toner box.
3. Remove two screws.

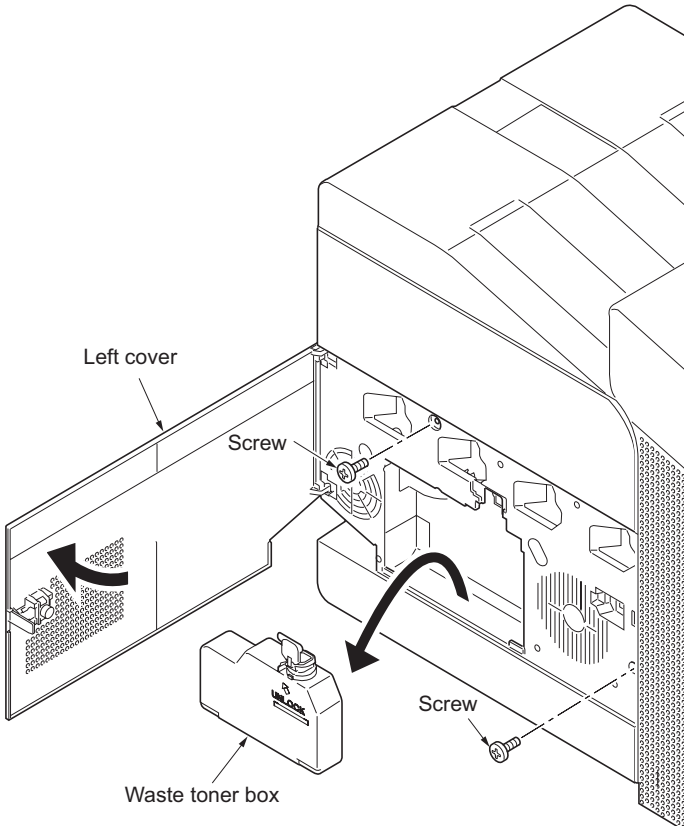

Figure 1-5-3

4. Open the top cover.
5. Release the five hooks and then remove the left rear cover.

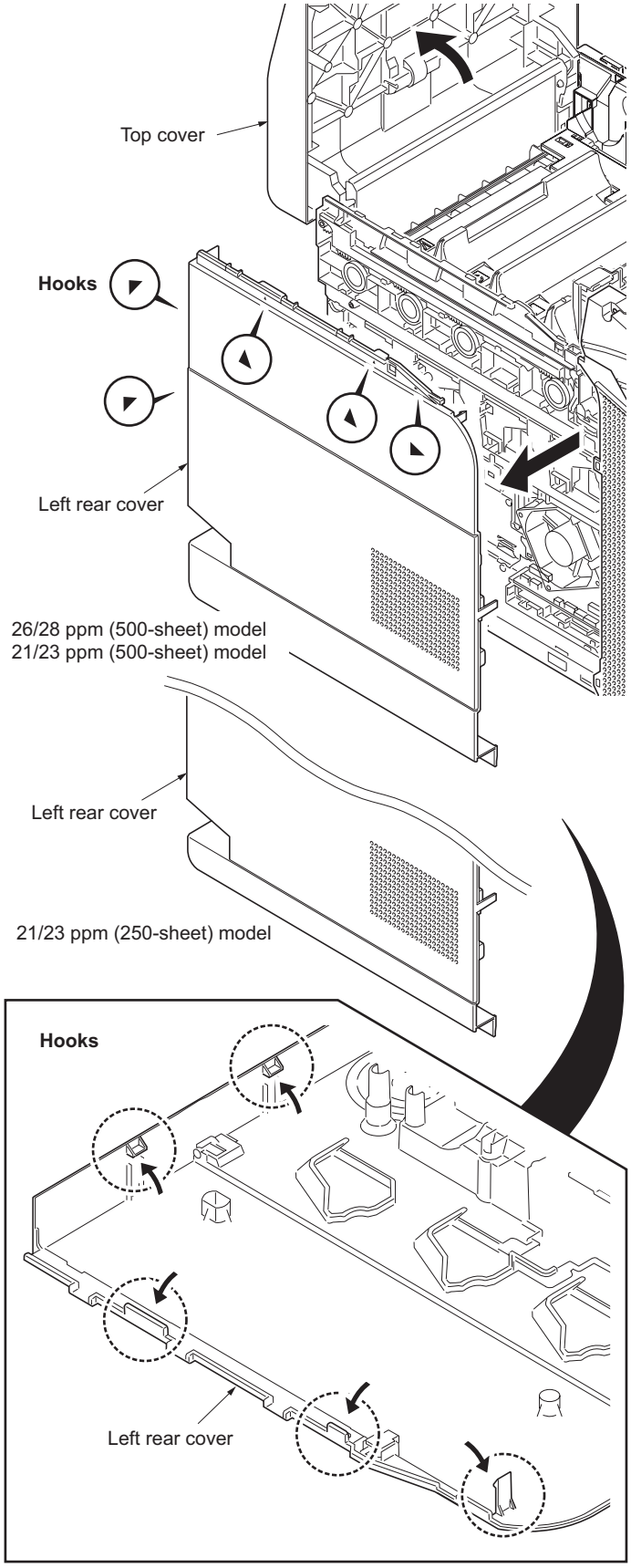

Figure 1-5-4

6. Open the front cover.
7. Remove the screw and then remove the left upper cover.
8. Slide the left front cover upward and then remove it.

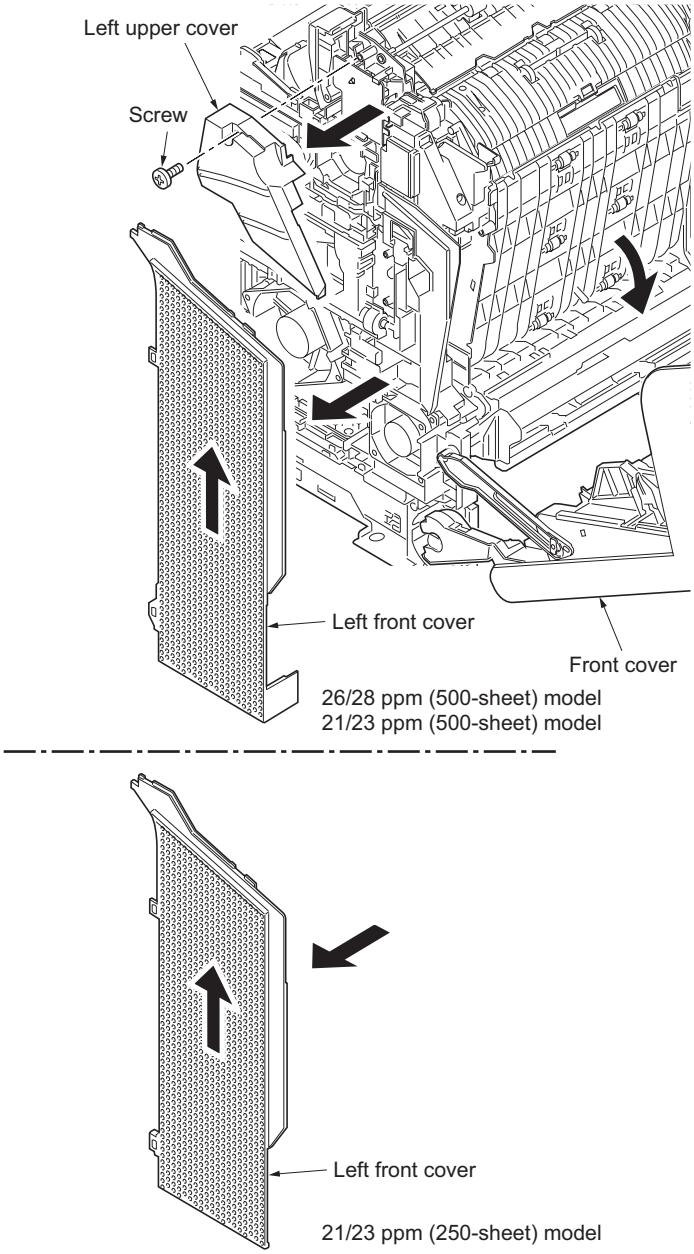

Figure 1-5-5

(2) Detaching and refitting the right rear cover, right upper cover and right front cover

Procedure

1. Open the top cover.
2. Open the right cover.
3. Remove the two screws.
4. Release the five hooks and then remove the right rear cover.

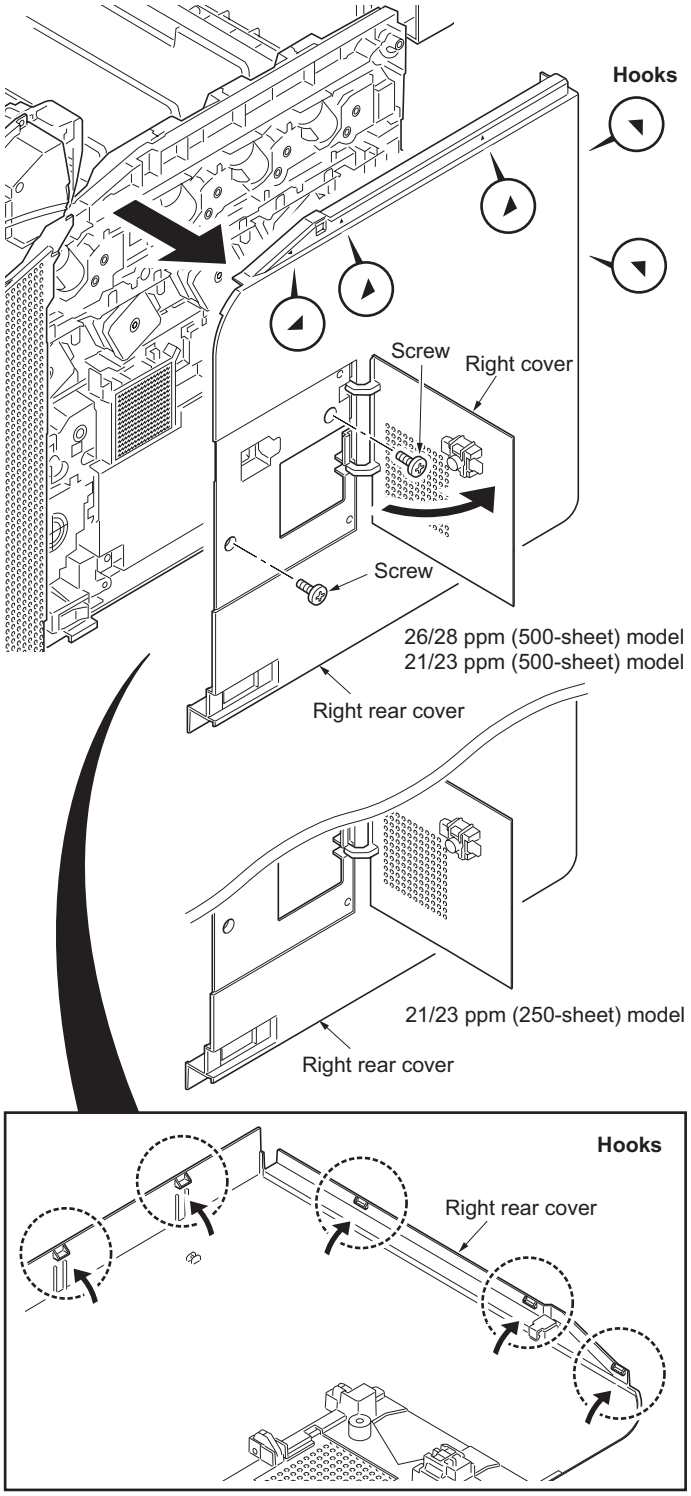

Figure 1-5-6

5. Open the front cover.
6. Remove the two screws and then remove the right upper cover.
7. Slide the right front cover and then remove it.

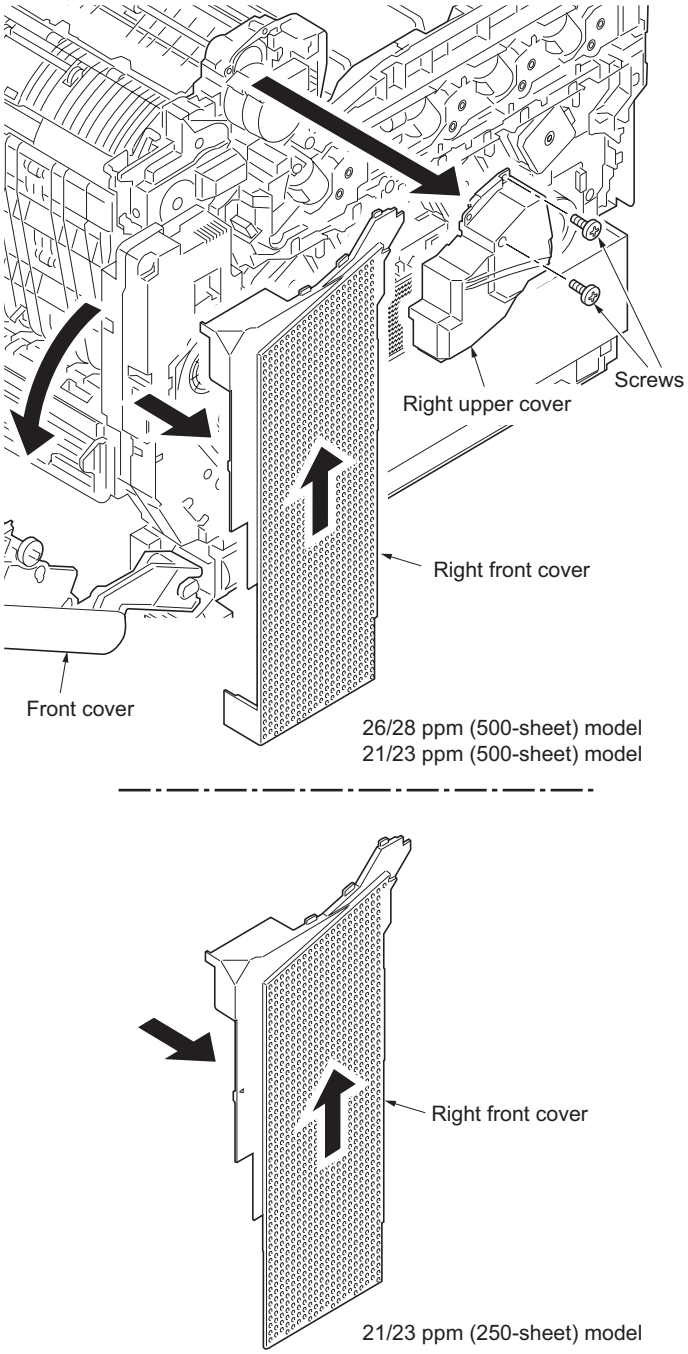

Figure 1-5-7

1-5-3 Paper feed section

(1) Detaching and refitting the paper feed roller assembly (paper feed roller and pickup roller)

Procedure

1. Remove the cassette.

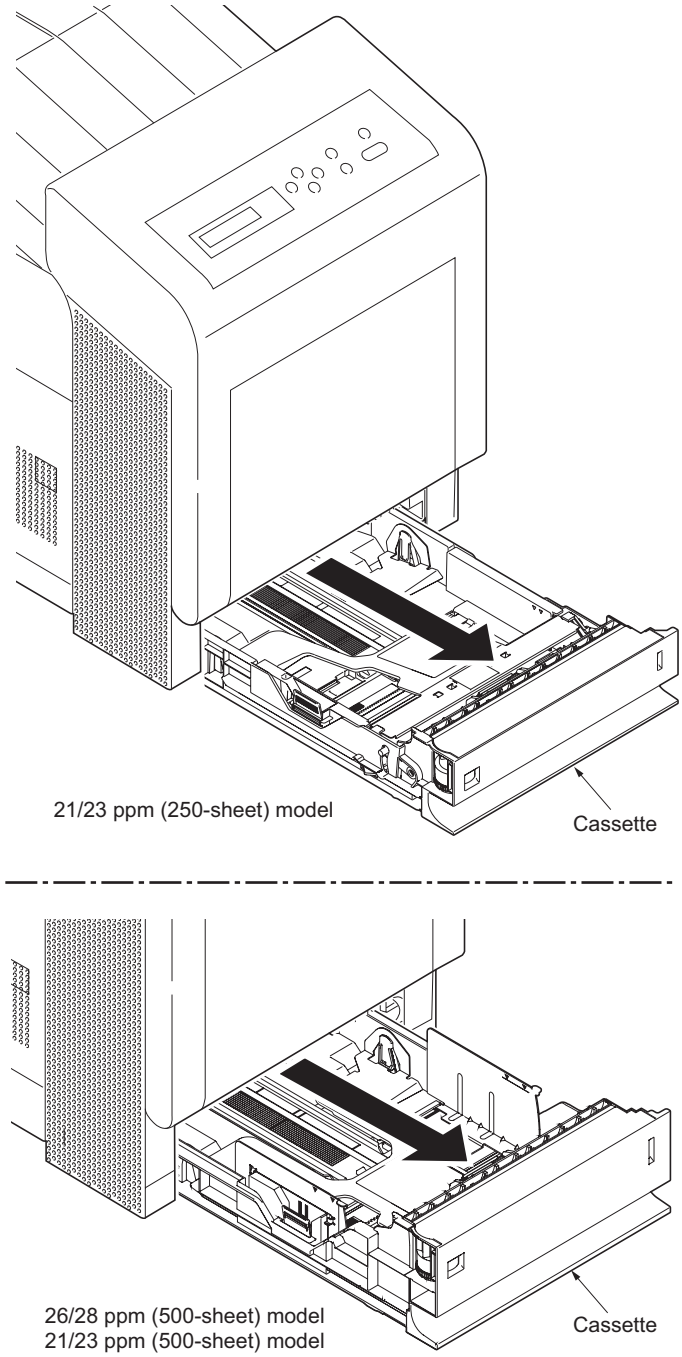

Figure 1-5-8

2. While pressing lever A and then slide the feed roller pin.
3. While pressing the lever B and then remove the paper feed roller assembly.

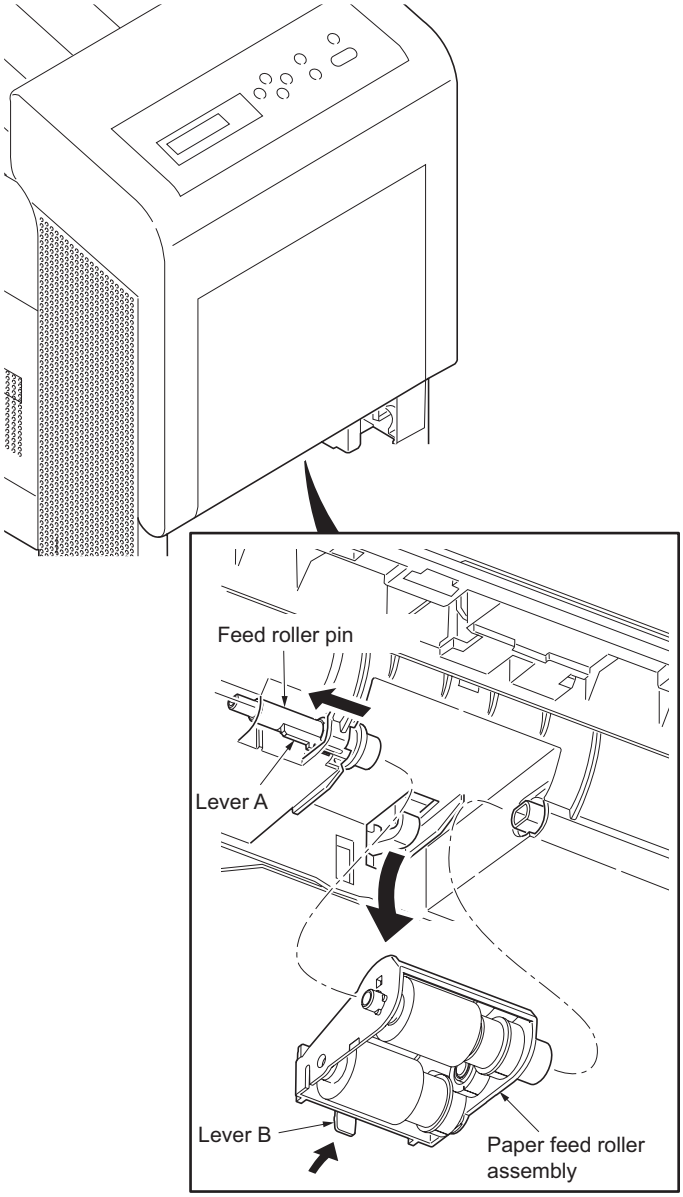

Figure 1-5-9

4. Check or replace the paper feed roller assembly and refit all the removed parts.

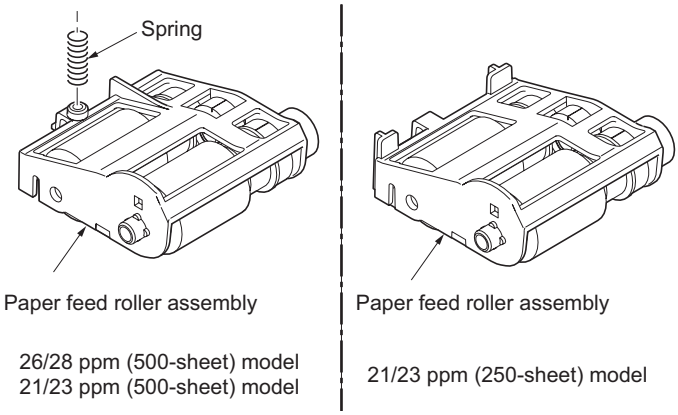

Figure 1-5-10

(2) Detaching and refitting the retard roller

Procedure

1. Remove the cassette (See page 1-5-8).
2. Push the bottom plate down until it locks. 21/23 ppm (500-sheet) model and 26/28 ppm (500-sheet) model only.
3. Release the two hooks and then remove the retard guide (retard roller assembly).

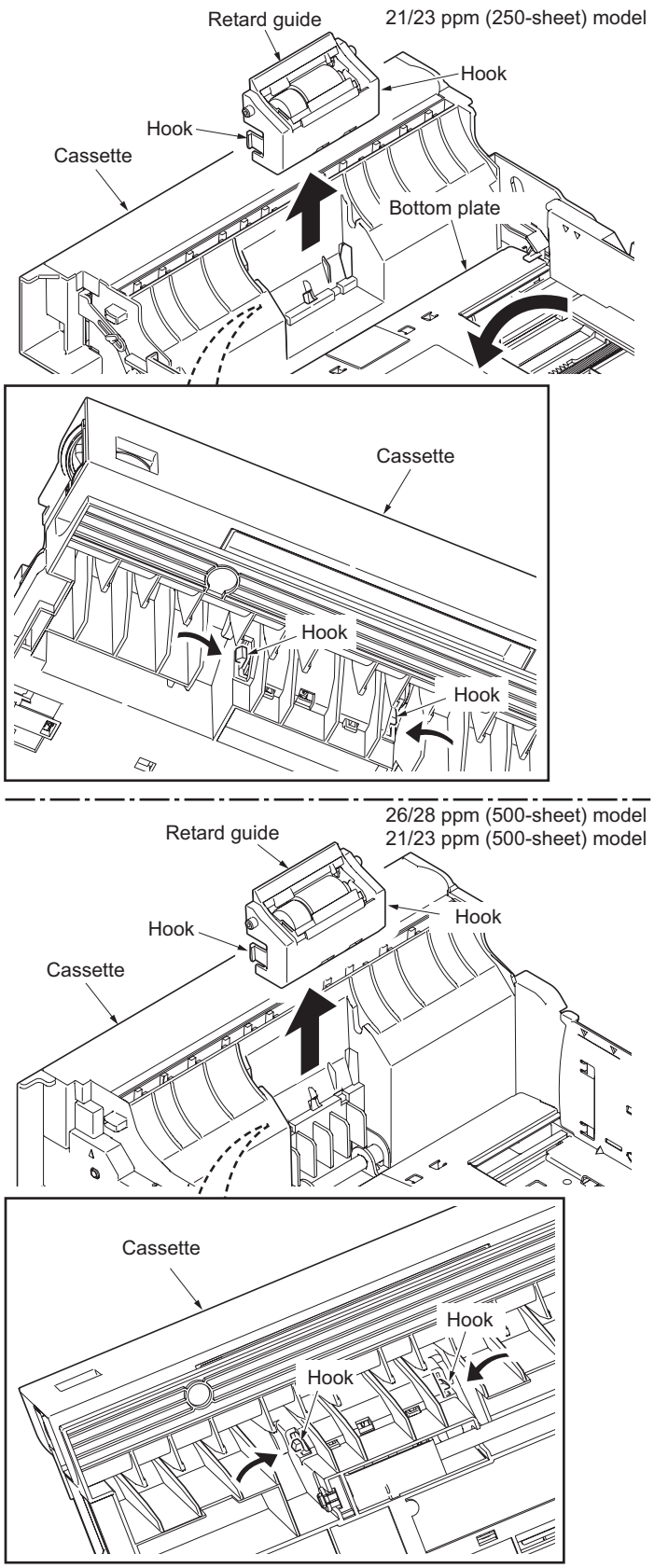

Figure 1-5-11

4. Remove the retard roller assembly.
5. Check or replace the retard roller assembly and refit all the removed parts.

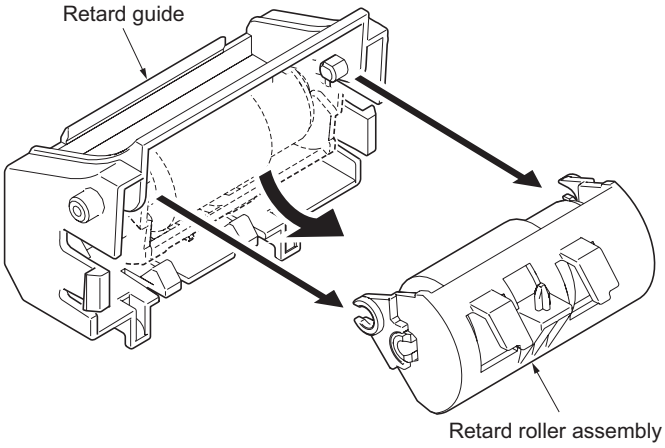

Figure 1-5-12

(3) Detaching and refitting the MP paper feed roller

Procedure

1. Open the front cover.
2. While releasing the hook and the slide the MPF shaft.
3. Remove the MP paper feed roller.
4. Check or replace the MP paper feed roller and refit all the removed parts.

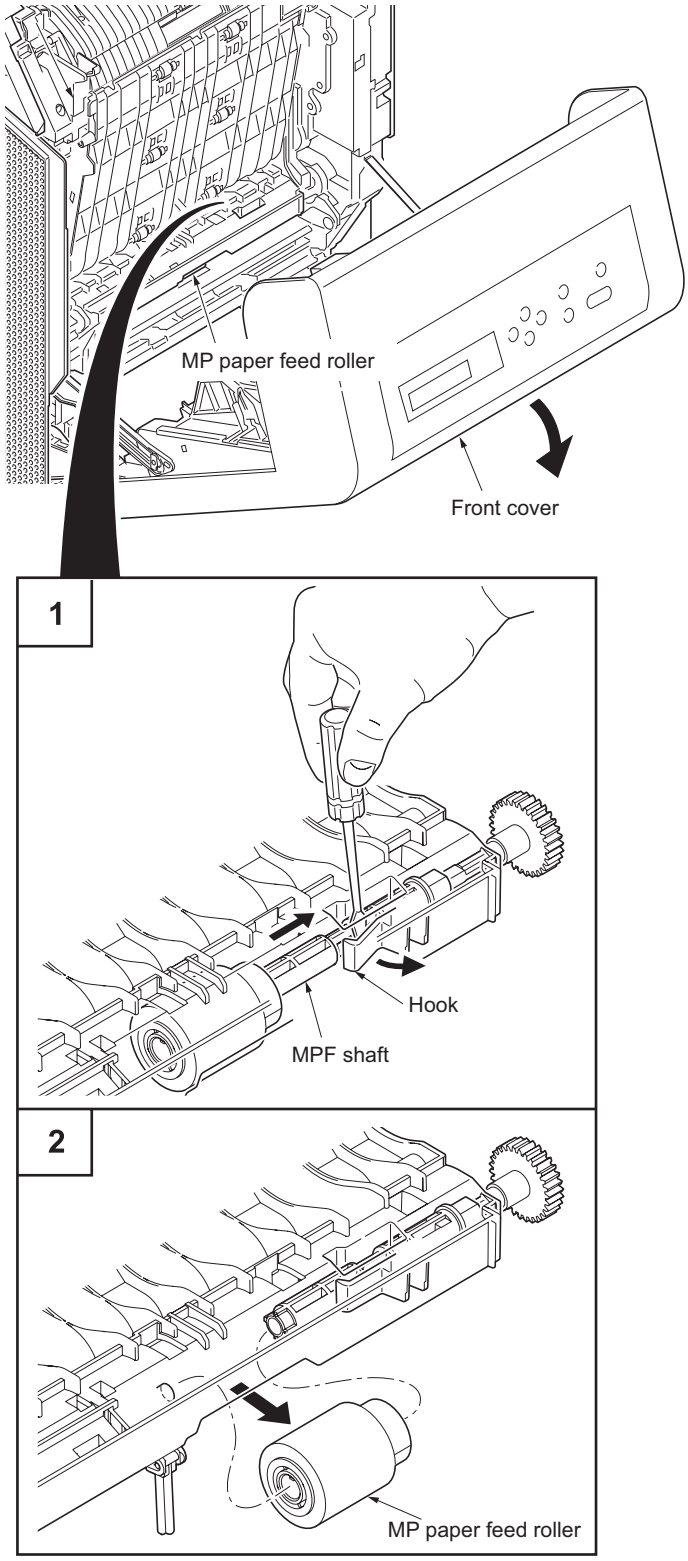

Figure 1-5-13

1-5-4 Developing section

(1) Detaching and refitting the developing unit

Procedure

1. Remove the intermediate transfer unit (See page 1-5-17).
2. Remove the drum unit (M,C,Y,K) (See page 1-5-15).
3. Pinch the lever of developing unit.
4. Remove the developing unit (M,C,Y,K).

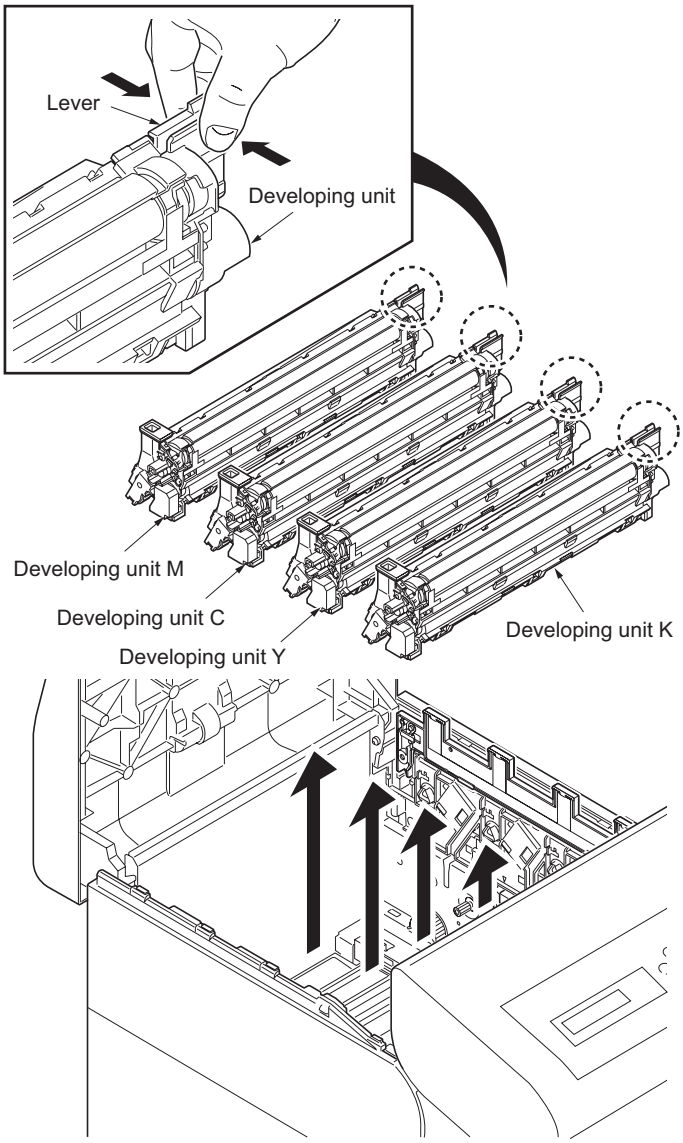

Figure 1-5-14

5. Check or replace the developing unit and refit all the removed parts.

   NOTE:
   Remove the cap before installing the new developing unit.

   When reinstalling the developing unit, press it down until the lever of developing unit is engaged with the notch.
   If it is difficult to engage the lever, press the unit down while rotating the gear to engage it.

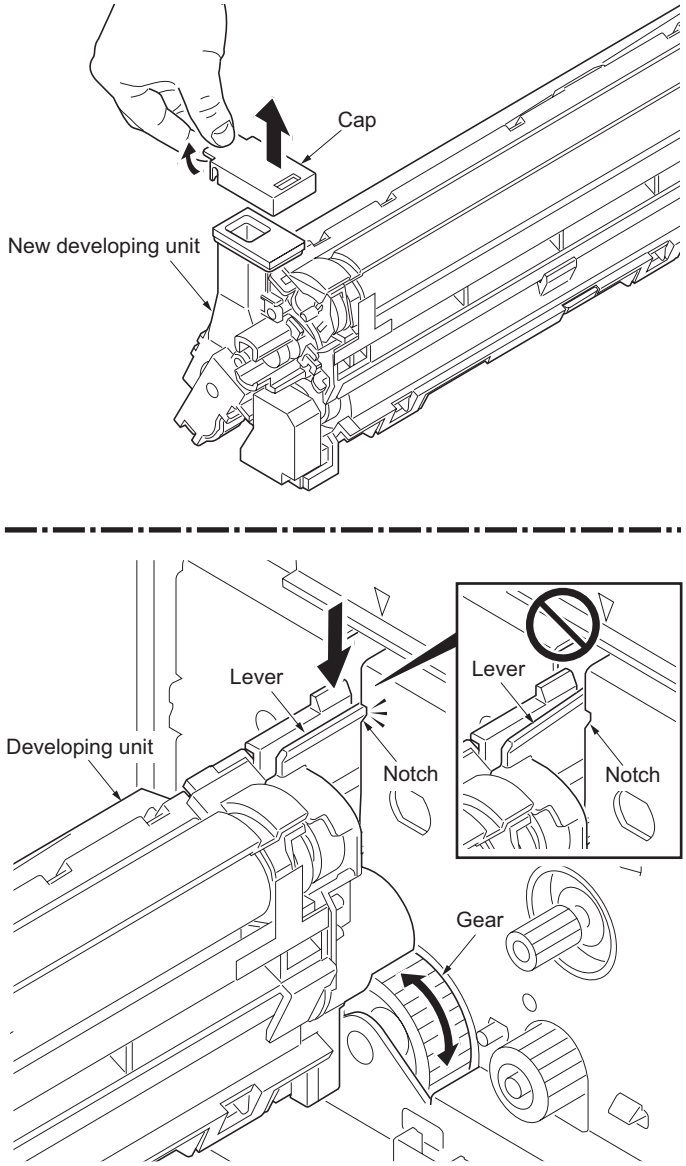

Figure 1-5-15

1-5-5 Drum section

(1) Detaching and refitting the drum unit

Procedure

1. Remove the intermediate transfer unit (See page 1-5-17).
2. Remove the drum unit (M,C,Y,K).
3. Check or replace the drum unit and refit all the removed parts.

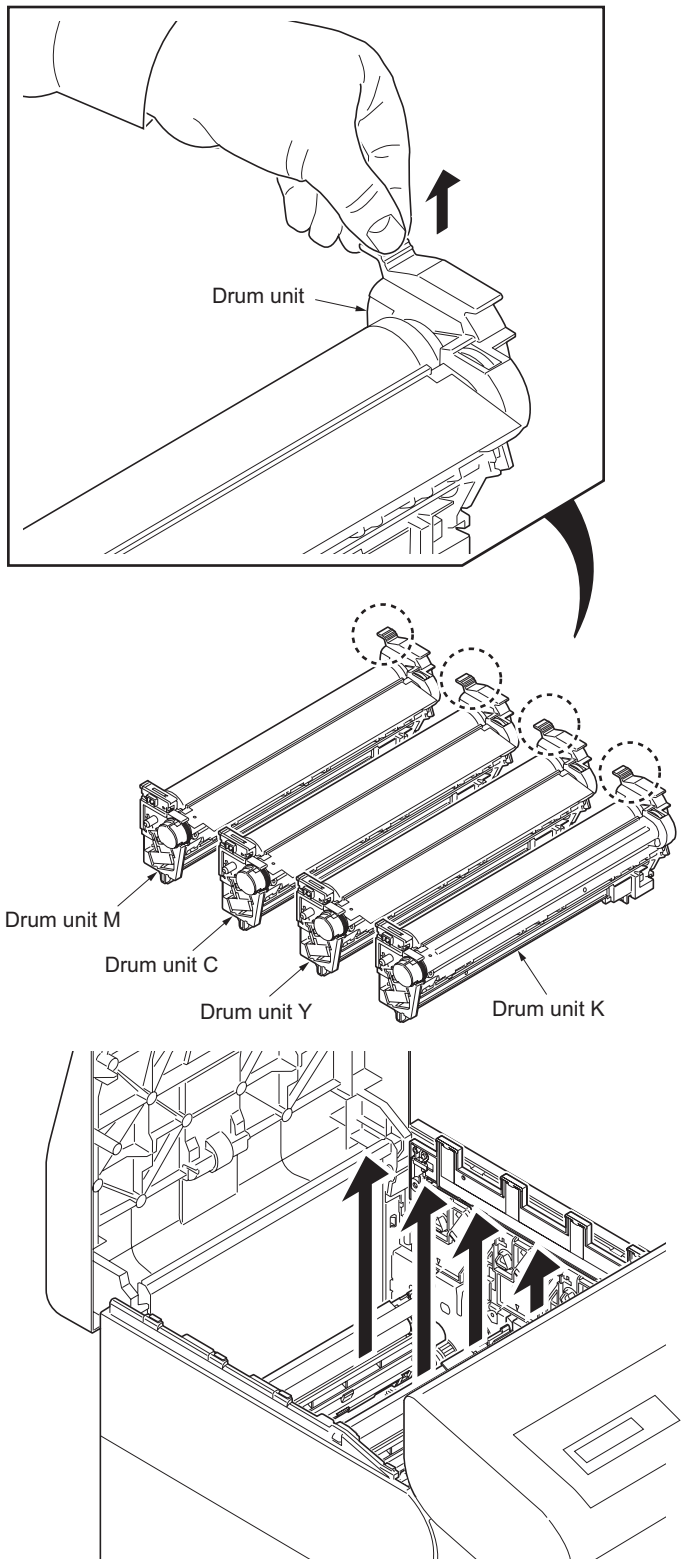

Figure 1-5-16

(2) Detaching and refitting the main charger unit

Procedure

1. Open the left cover.
2. Remove the main charger unit (M,C,Y,K).
3. Check or replace the main charger unit and refit all the removed parts.

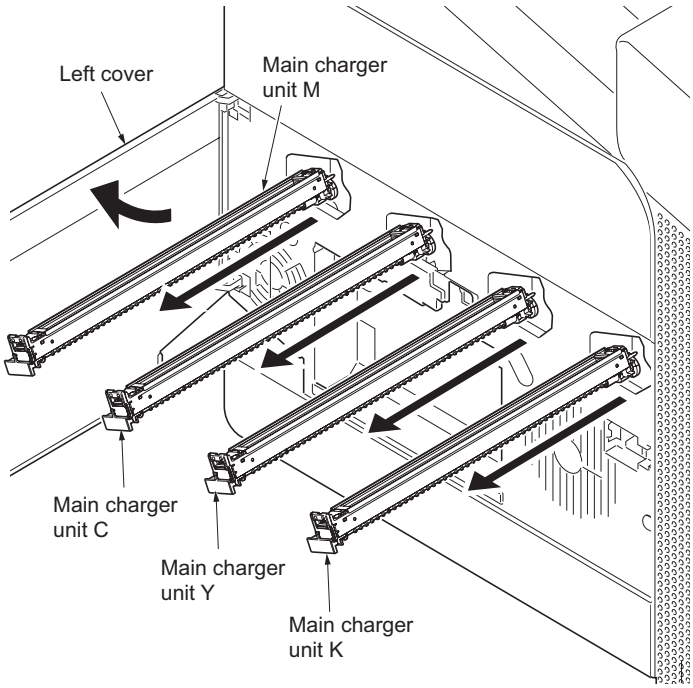

Figure 1-5-17

1-5-6 Transfer/separation section

(1) Detaching and refitting the intermediate transfer unit

Procedure

1. Open the top cover.
2. Remove the all toner containers (M,C,Y,K).

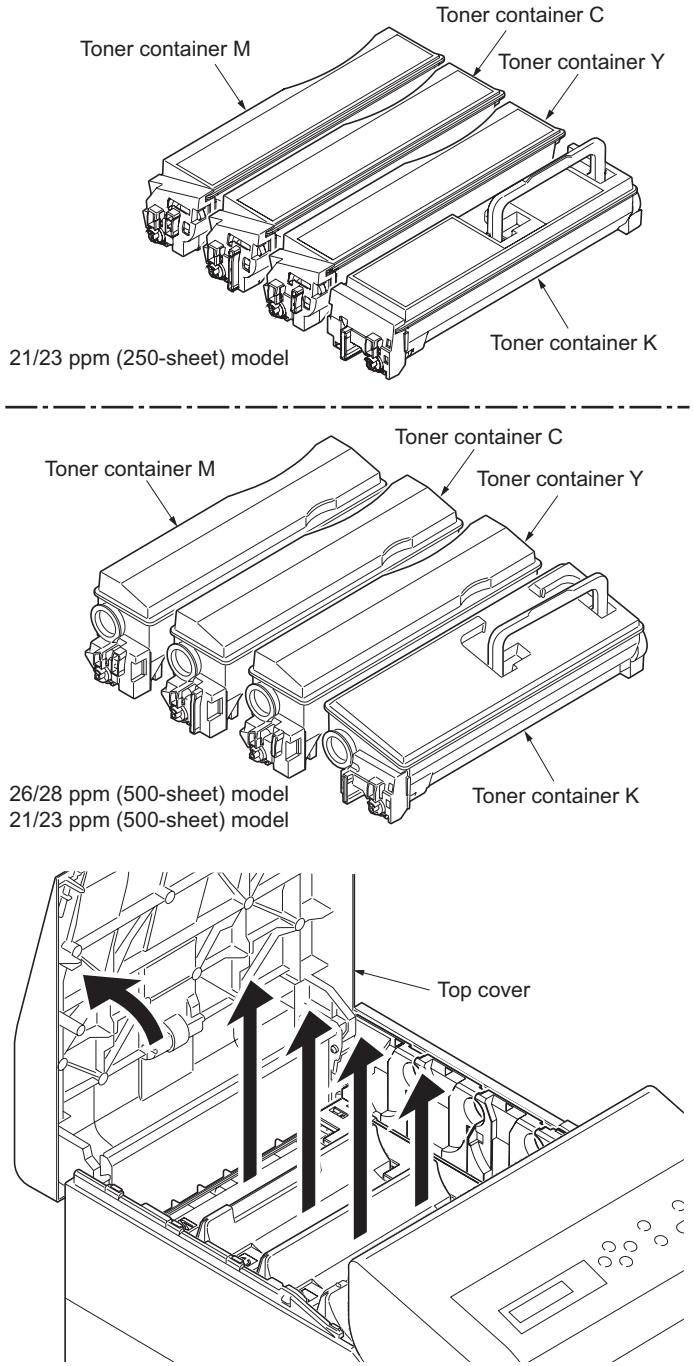

Figure 1-5-18

3. Remove the all container guides (M,C,Y,K).

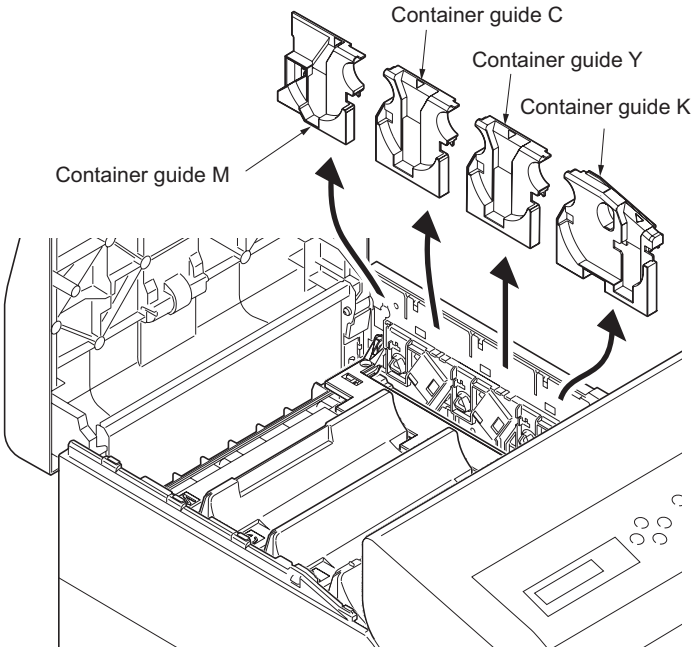

Figure 1-5-19

4. Remove the two screws.
5. Open the RFID holder.

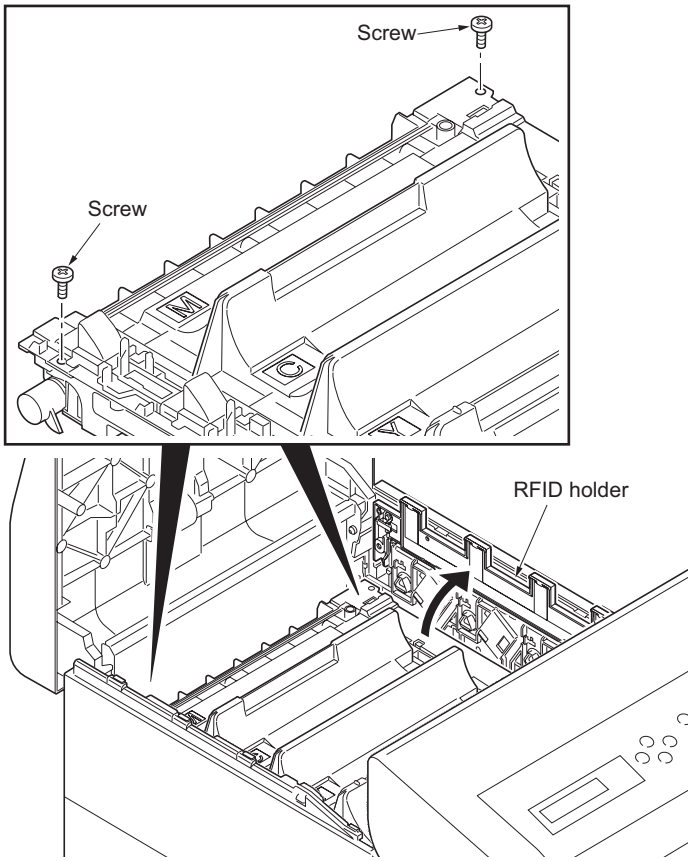

Figure 1-5-20

6. Remove the intermediate transfer unit.
7. Check or replace the intermediate transfer unit and refit all the removed parts.

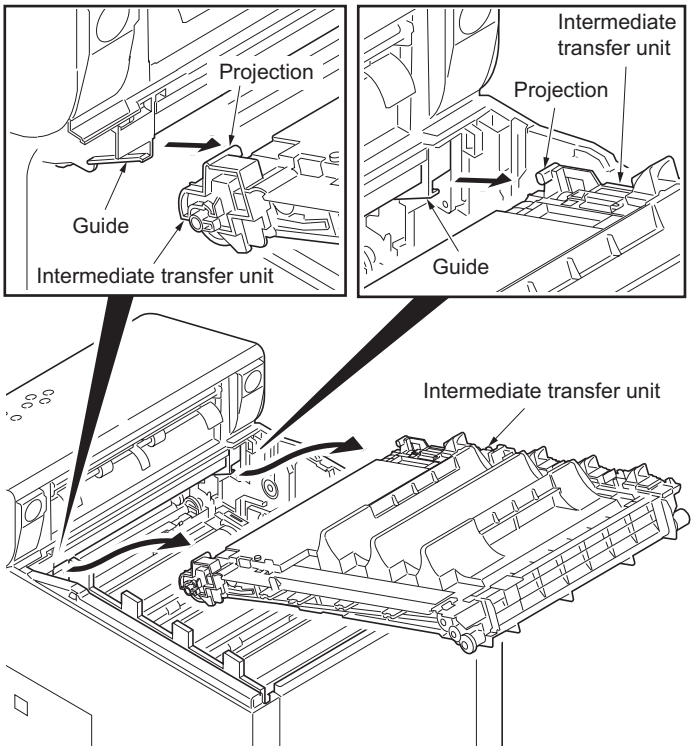

Figure 1-5-21

(2) Detaching and refitting the transfer roller unit

Procedure

1. Open the front cover.
2. Open the duplex unit B.
3. Release the two hooks and then remove the transfer roller unit.
4. Check or replace the transfer roller unit and refit all the removed parts.

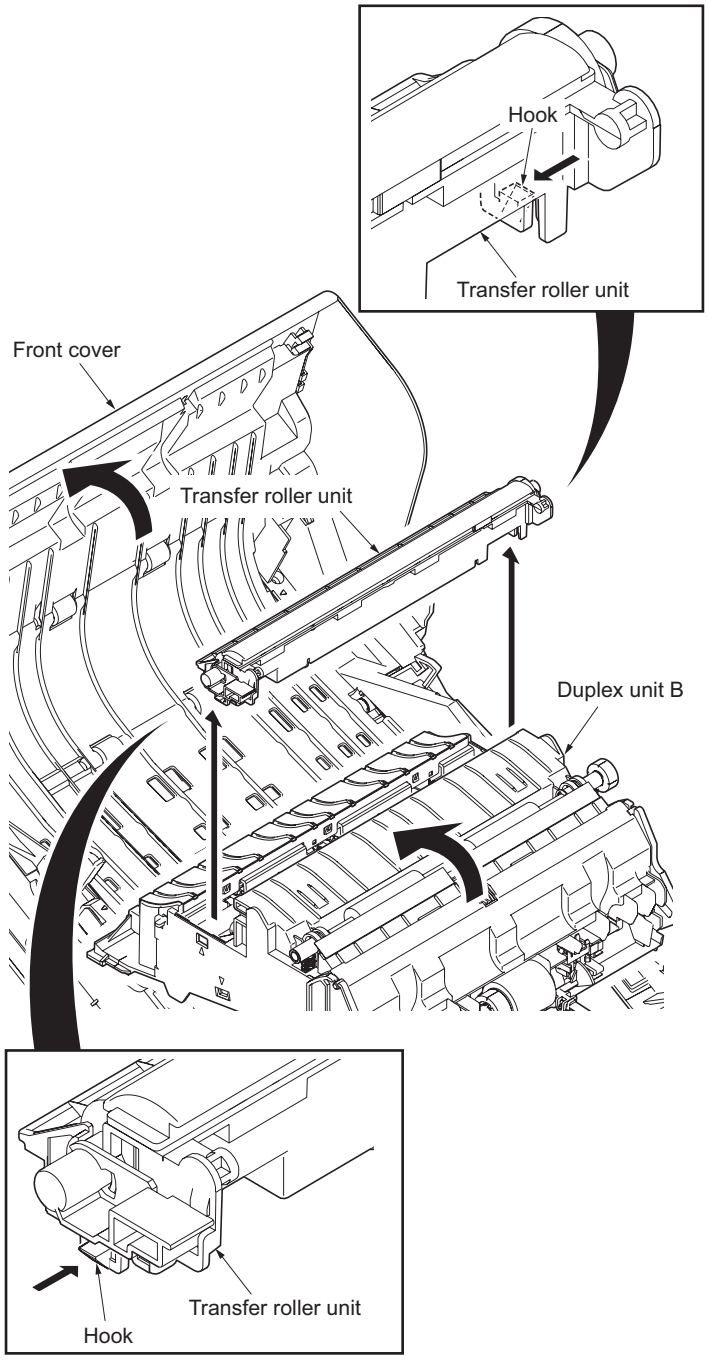

Figure 1-5-22

(3) Detaching and refitting the duplex unit B

Procedure

1. Remove the outer covers (See page 1-5-3).
2. Remove the power source PWB (See page 1-5-27).
3. While releasing the hook and then pull the MCH cleaning shaft.

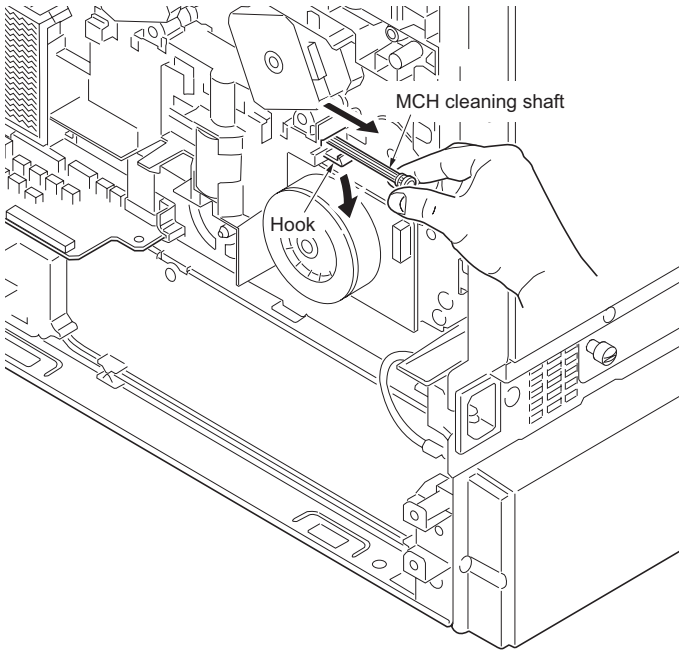

Figure 1-5-23

4. Open the front cover.
5. Remove the screw and then remove the front cover right stopper.

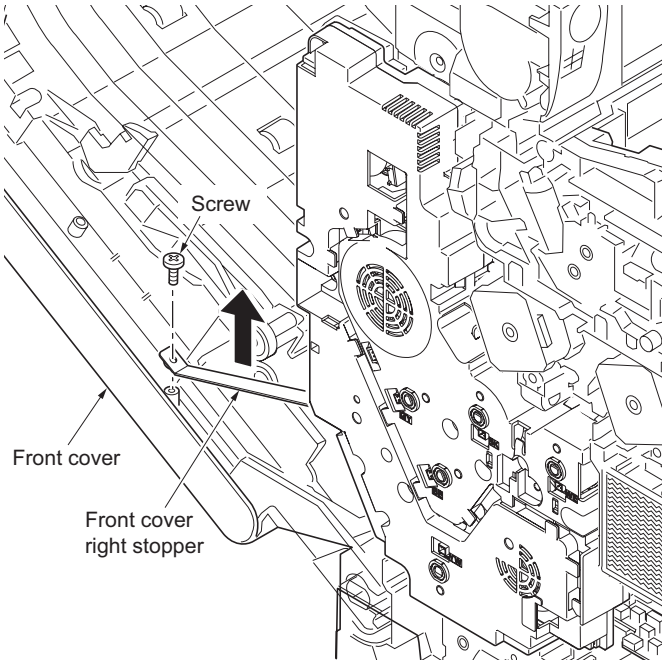

Figure 1-5-24

6. Remove the six screws and then remove the feed drive unit.

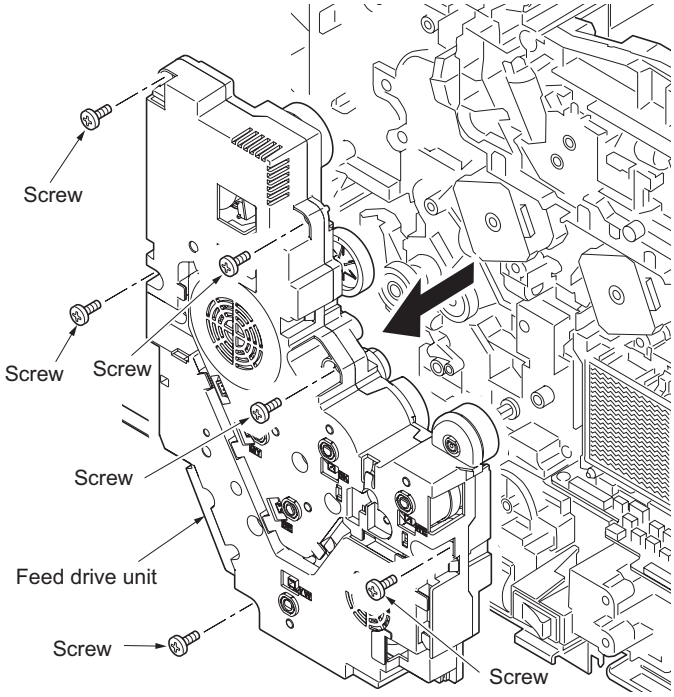

Figure 1-5-25

7. Remove the four connectors.

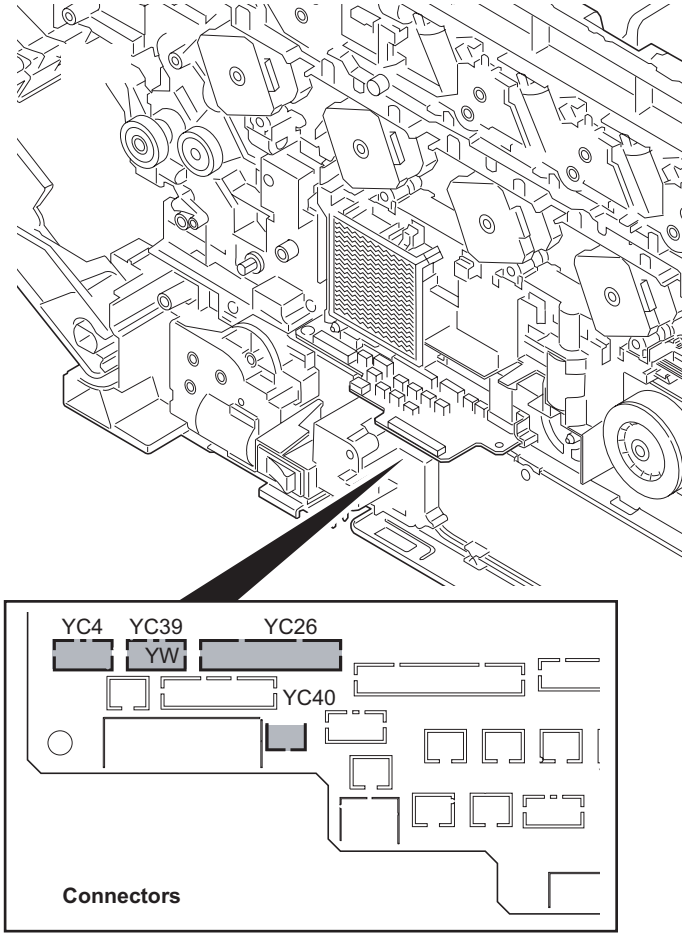

Figure 1-5-26

8. Remove the FFC.
9. Remove the screw and then remove the two grounding terminals.

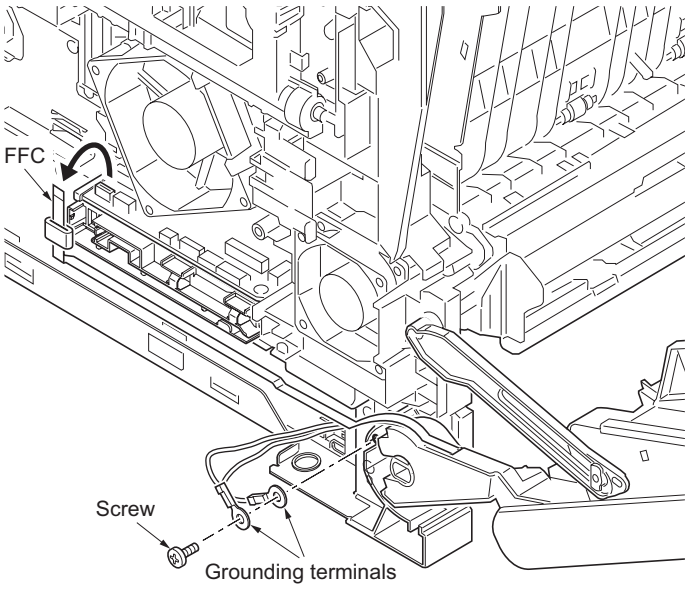

Figure 1-5-27

10. Remove the axis of the front cover left stopper from the hole.
11. Remove the front cover.

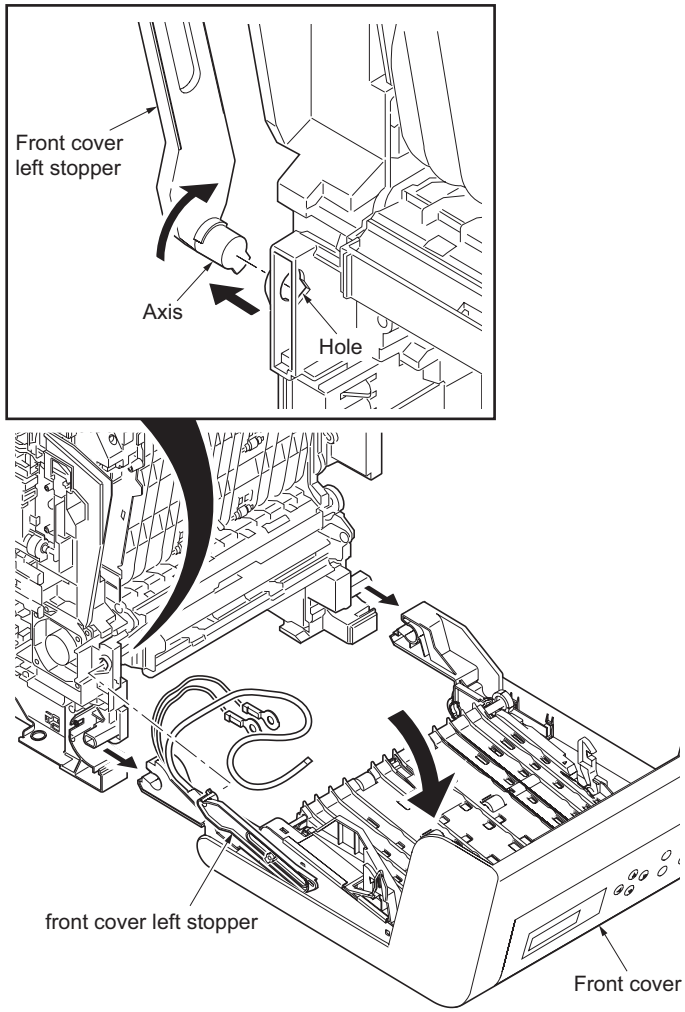

Figure 1-5-28

12. Remove the two screws and then remove the MP paper feed lower unit.

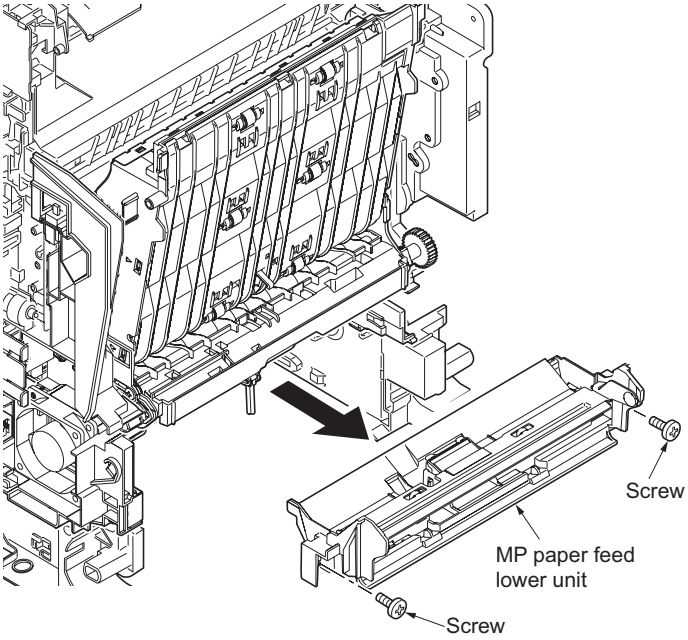

Figure 1-5-29

13. Remove the three connectors.

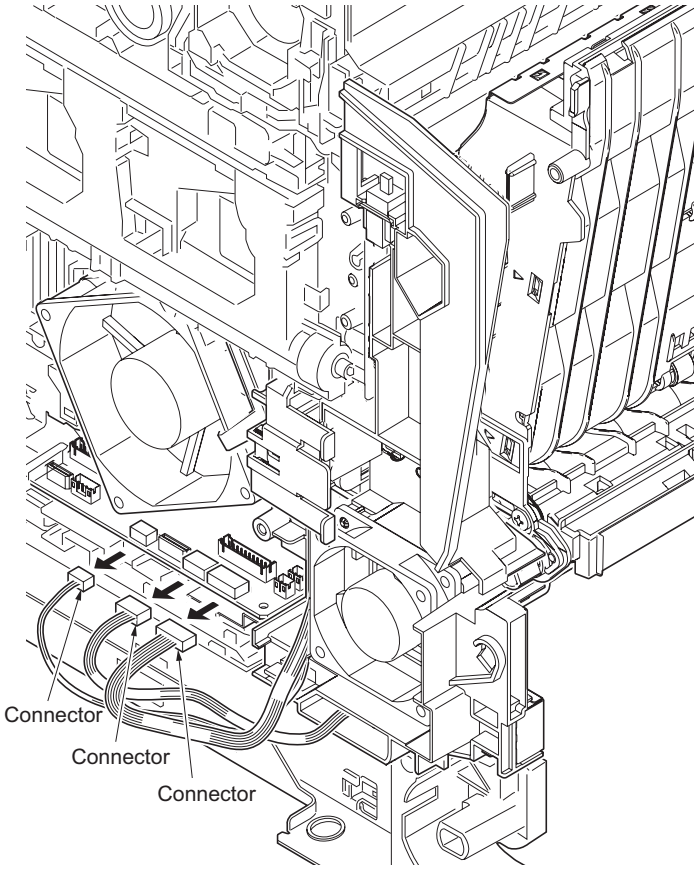

Figure 1-5-30

14. Open the duplex unit B.
15. Remove the duplex unit B.
16. Check or replace the duplex unit B and refit all the removed parts.

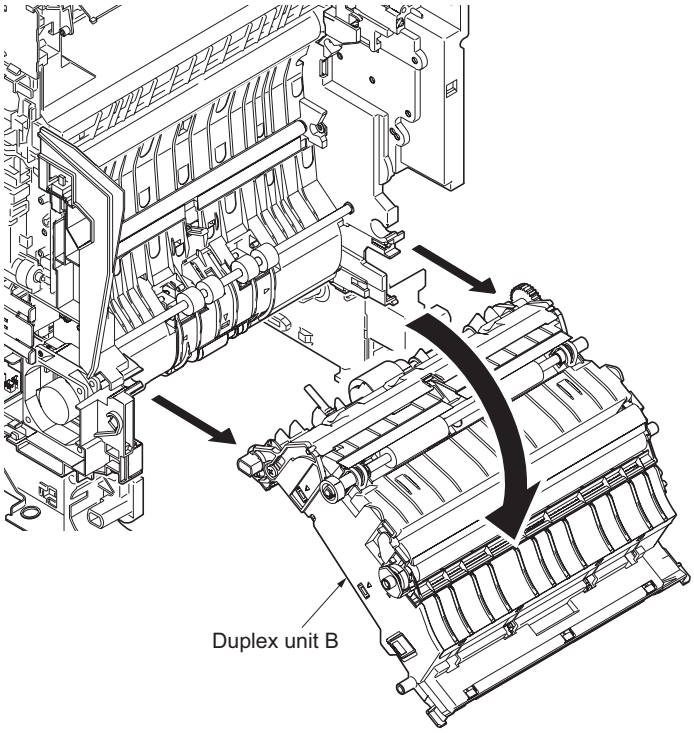

Figure 1-5-31

1-5-7 Fuser section

(1) Detaching and refitting the fuser unit

Procedure

1. Remove the outer covers (See page 1-5-3).
2. Remove three connectors.

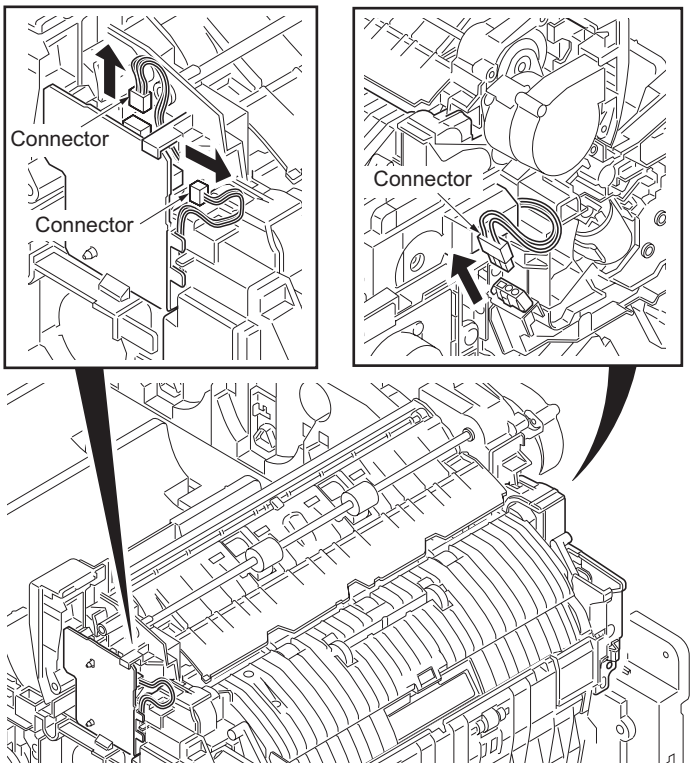

Figure 1-5-32

3. Remove two screws.
4. Unhook the hook and then remove the fuser unit.
5. Check or replace the fuser unit and refit all the removed parts.

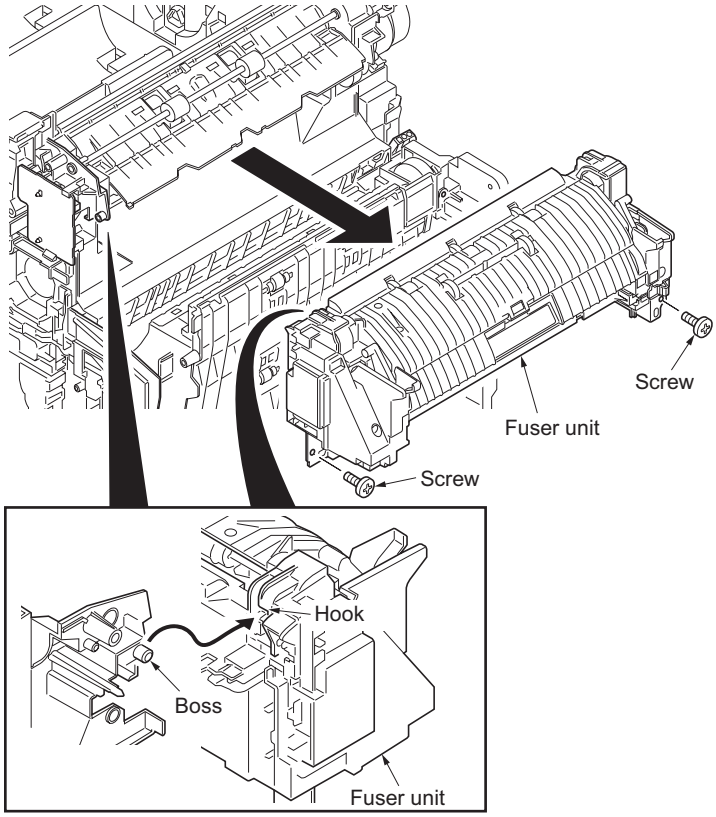

Figure 1-5-33

1-5-8 PWBs

(1) Detaching and refitting the power source PWB

Procedure

1. Remove the right rear cover (See page 1-5-6).
2. Remove the three screws and then remove the power source shield.

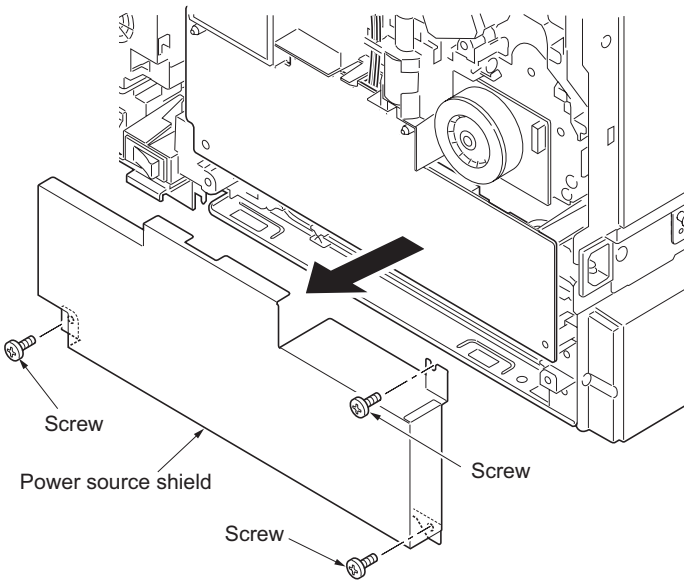

Figure 1-5-34

3. Remove the connector.
4. Remove the two screws.

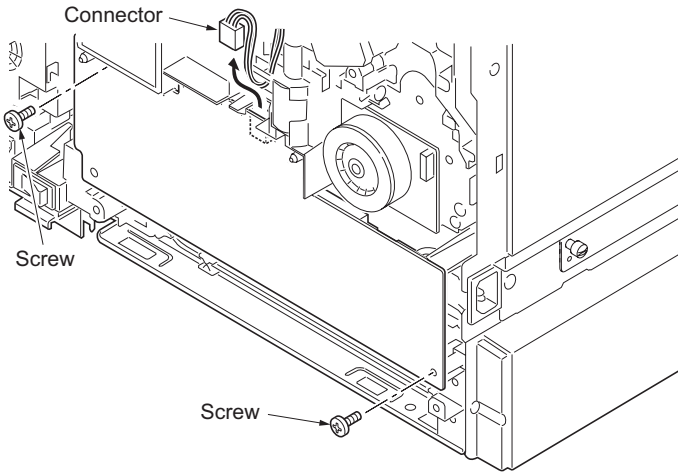

Figure 1-5-35

5. Remove the two connectors and then remove the power source PWB.
6. Check or replace the power source PWB and refit all the removed parts.

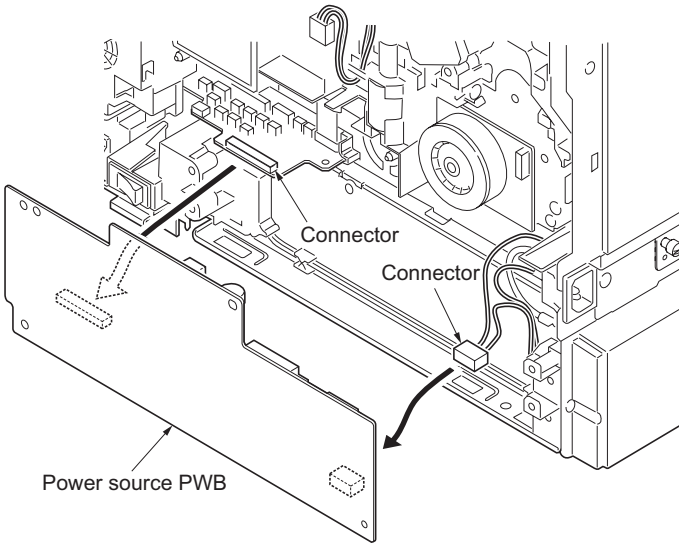

Figure 1-5-36

(2) Detaching and refitting the main PWB

Procedure

1. Remove the two screws.
2. Remove the main PWB.
3. Check or replace the main PWB and refit all the removed parts.

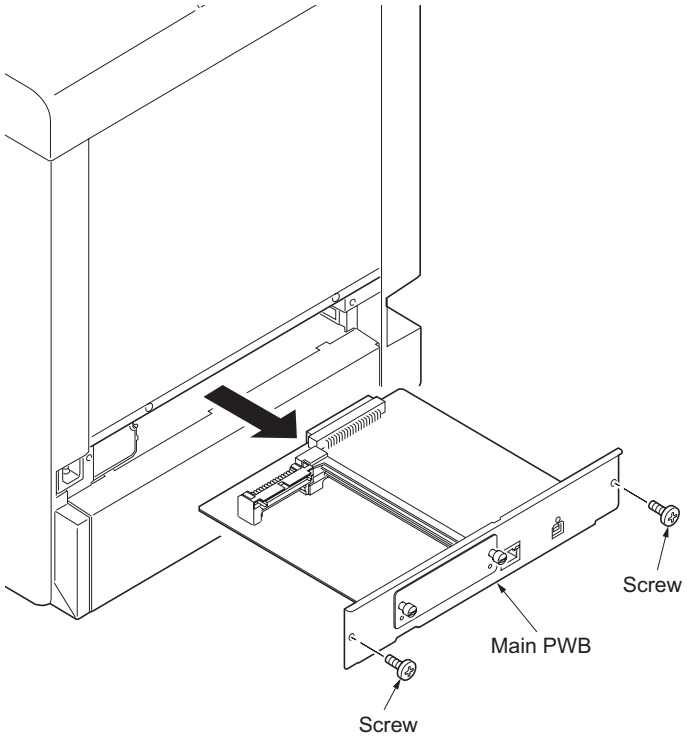

Figure 1-5-37

(3) Detaching and refitting the engine PWB

Procedure

1. Remove the duplex unit B (See page 1-5-21)
2. Remove the connector.

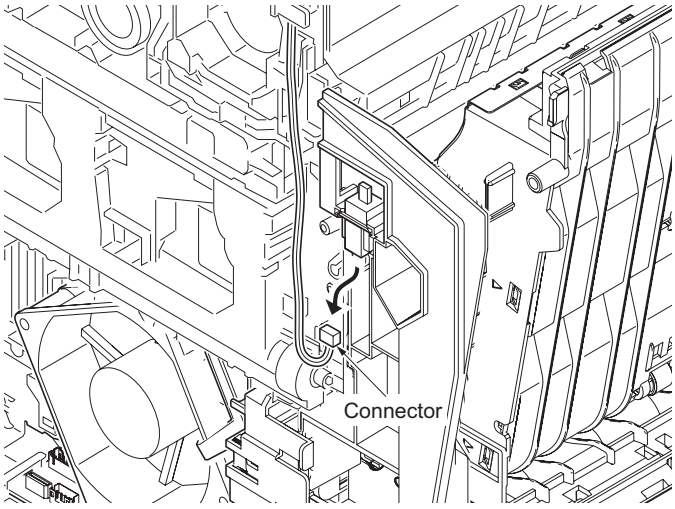

Figure 1-5-38

3. Remove the seven screws and then remove the feed housing.

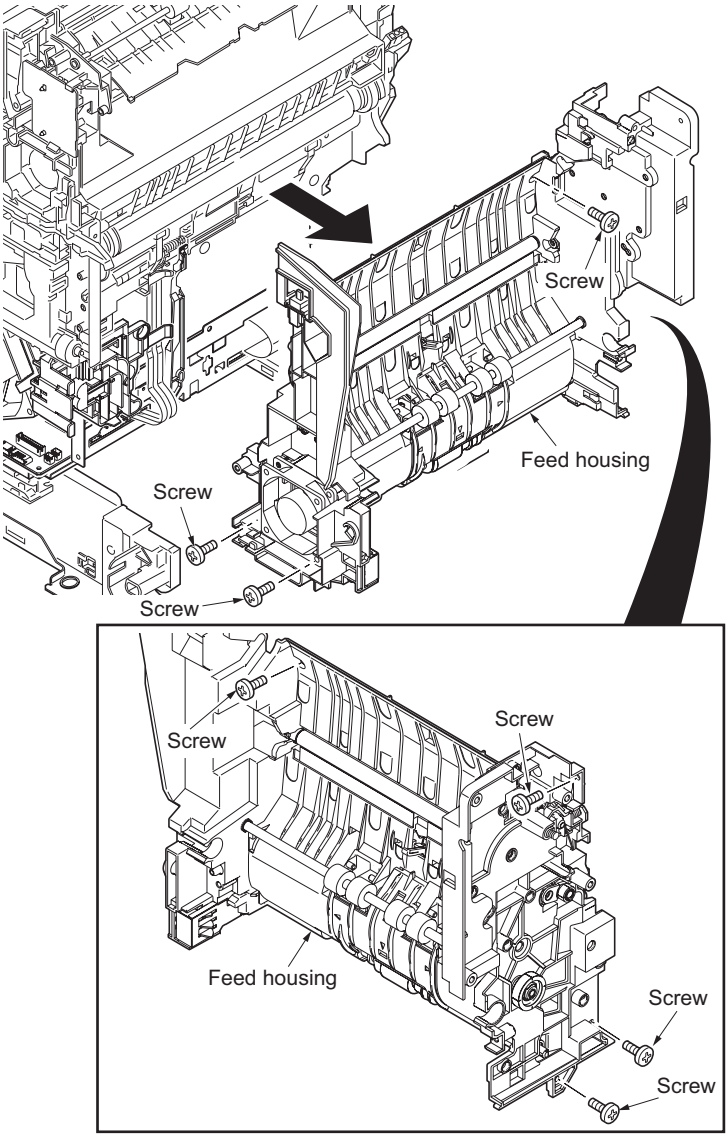

Figure 1-5-39

4. Remove the connector A.
5. Remove the developing fan motor 1.
6. Remove the two connectors B.
7. Remove the FFC.

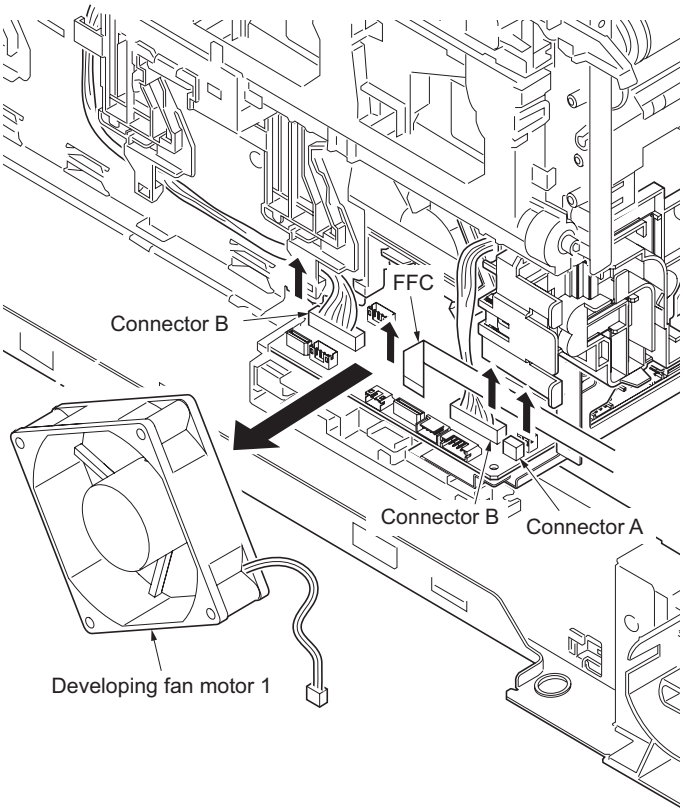

Figure 1-5-40

8. Remove the three FFCs.
9. Remove the two connectors.

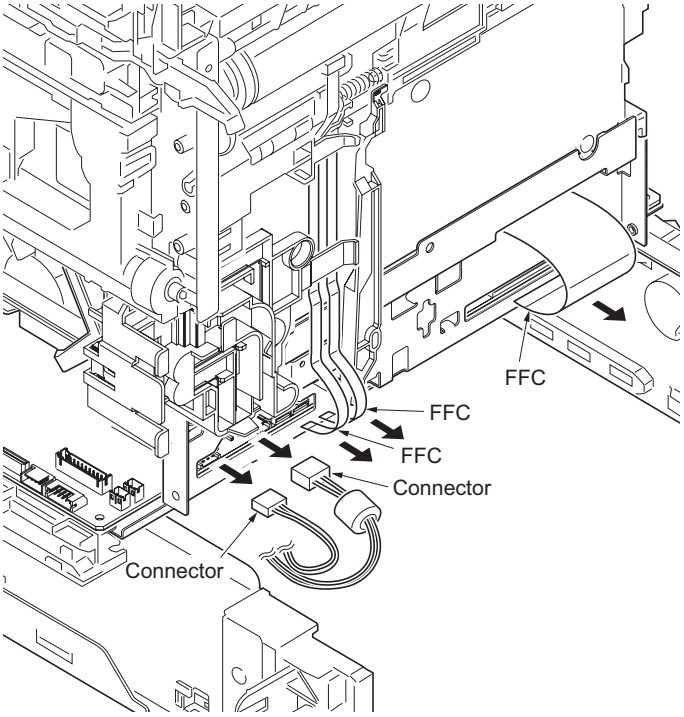

Figure 1-5-41

10. While unlatching the latch and then remove the lever link.

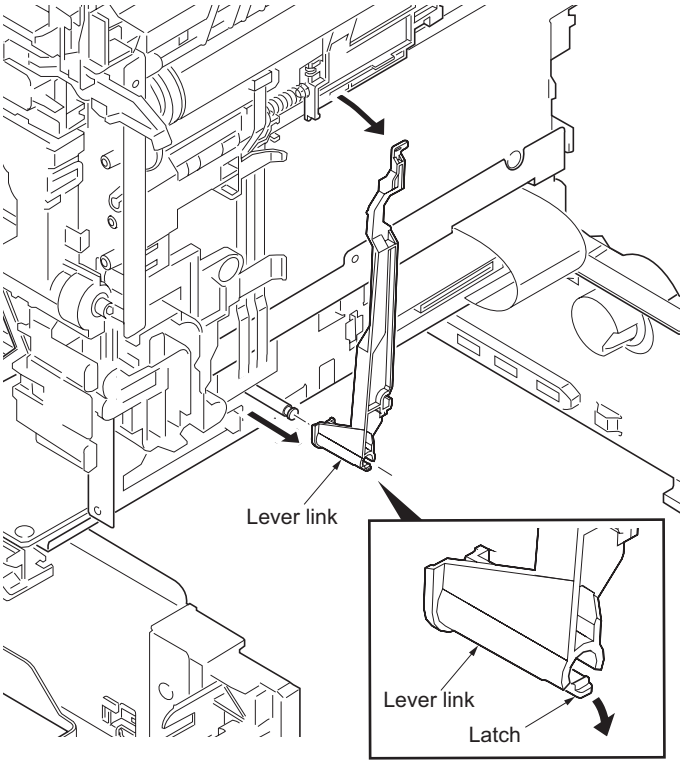

Figure 1-5-42

11. Remove the twenty connectors.

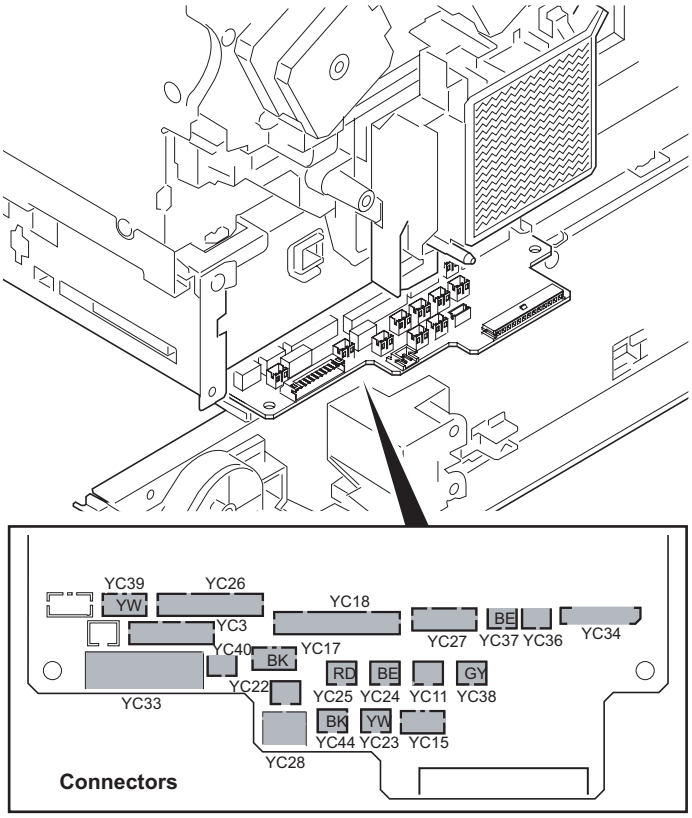

Figure 1-5-43

12. Remove the three screws and then remove the engine PWB assembly.

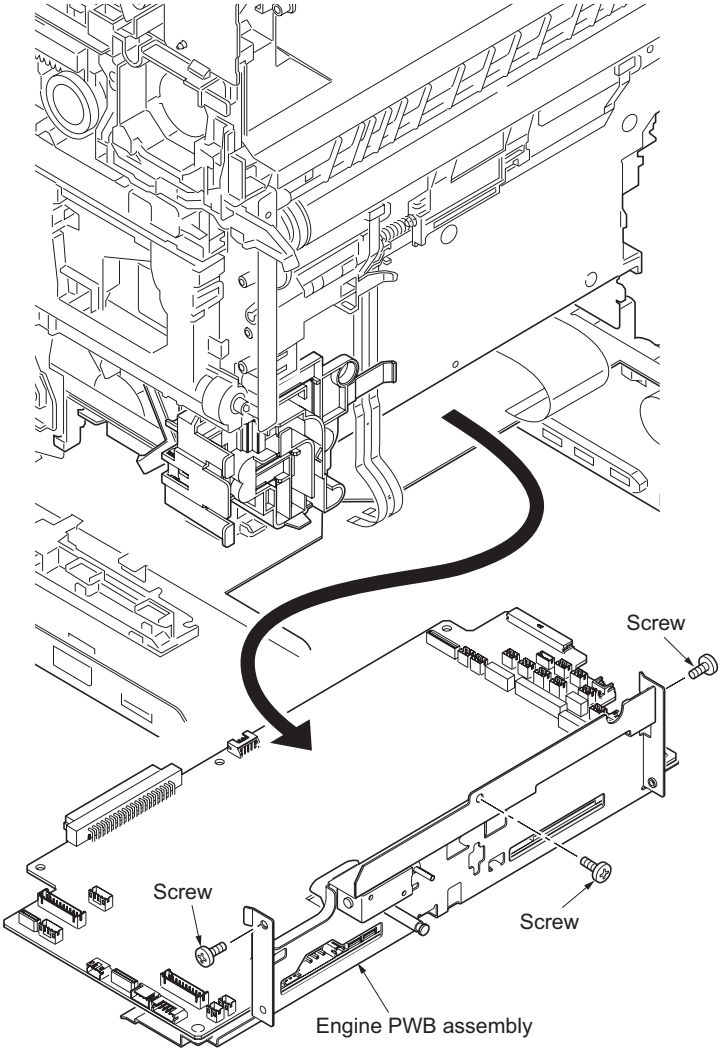

Figure 1-5-44

13. Remove the two screws and then remove the engine PWB.
14. Check or replace the engine PWB and refit all the removed parts.
    To replace the engine PWB, remove the EEPROM (U4) from the old engine PWB and mount it to the new engine PWB.

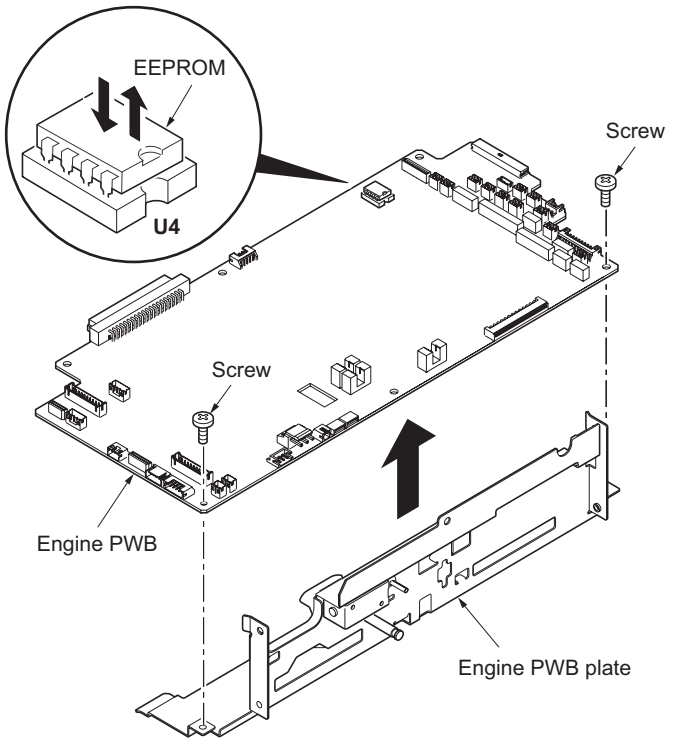

Caution on re-installing the engine board assembly

Insert the engine PWB assembly in the printer so that both the engine PWB and the harness bracket are flush at each end.
Do not insert the engine PWB assembly the way beyond the above, otherwise, the engine PWB plate will be deformed, causing malfunctioning of the ID sensor cleaning system.

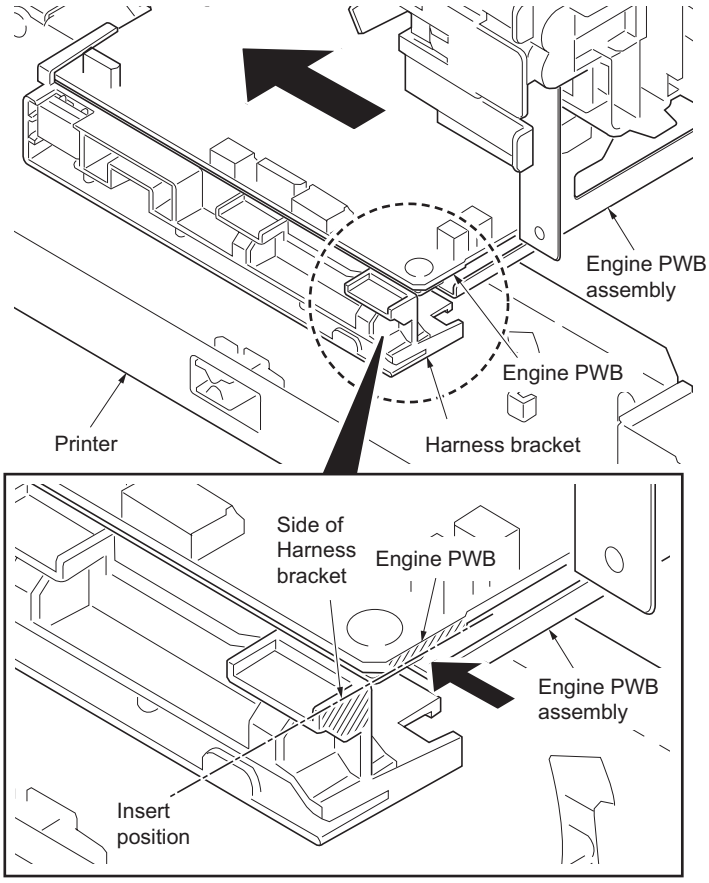

Figure 1-5-45

(4) Detaching and refitting the high voltage PWB

Procedure

1. Remove the all drum units (See page 1-5-15).
2. Remove the all developing units (See page 1-5-13).
3. Remove the engine PWB (See page 1-5-30).
4. Remove the screw and then remove the HV terminal assembly K.

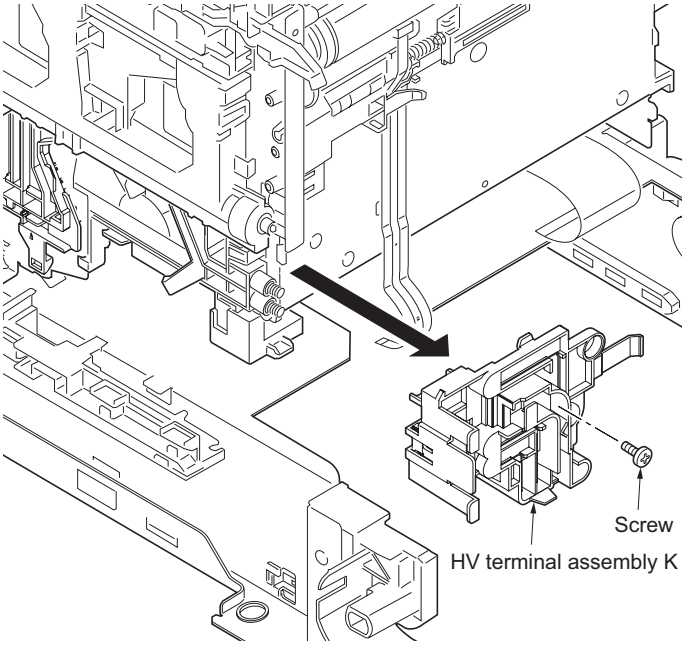

Figure 1-5-46

5. Remove the screw and then remove the inner cover.
6. Remove the three HV bracket C assemblies.

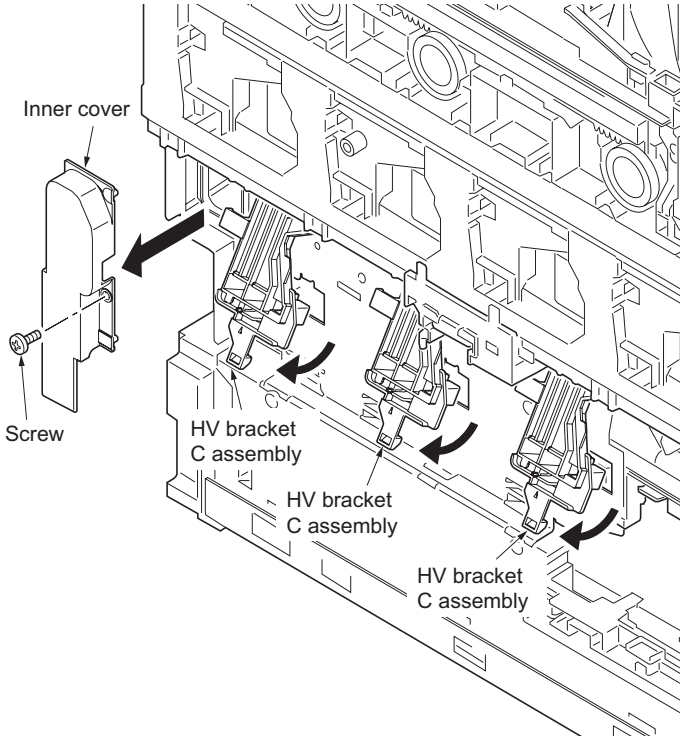

Figure 1-5-47

7. Remove six terminals.
8. Remove the TC high voltage bracket.
9. Remove the two screws.

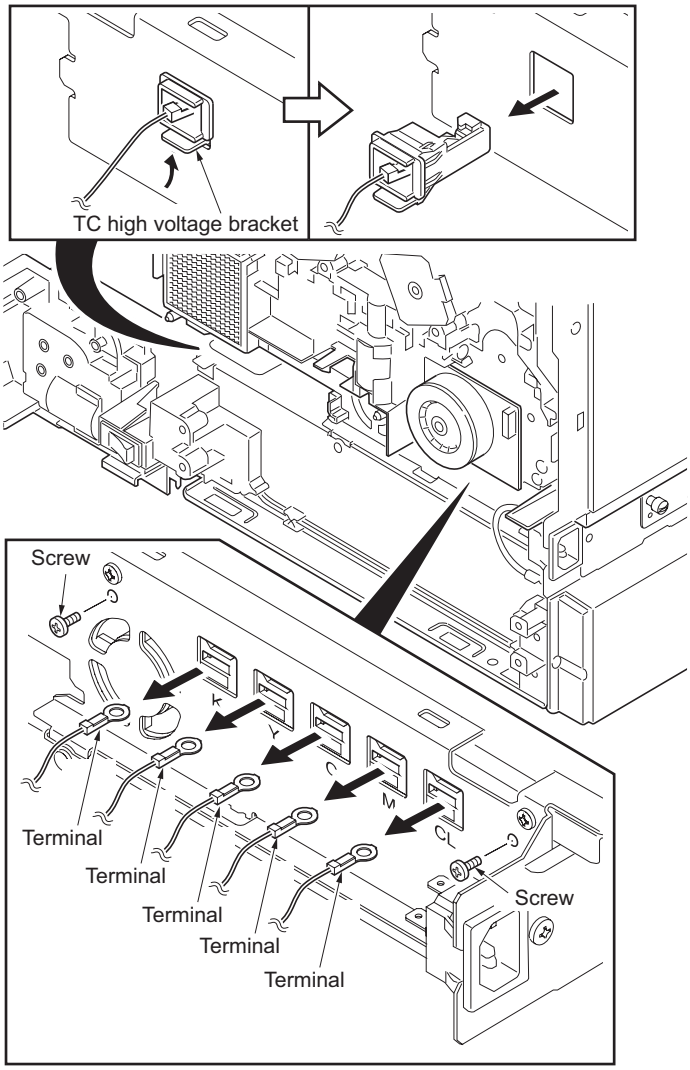

Figure 1-5-48

10. Remove the screw.

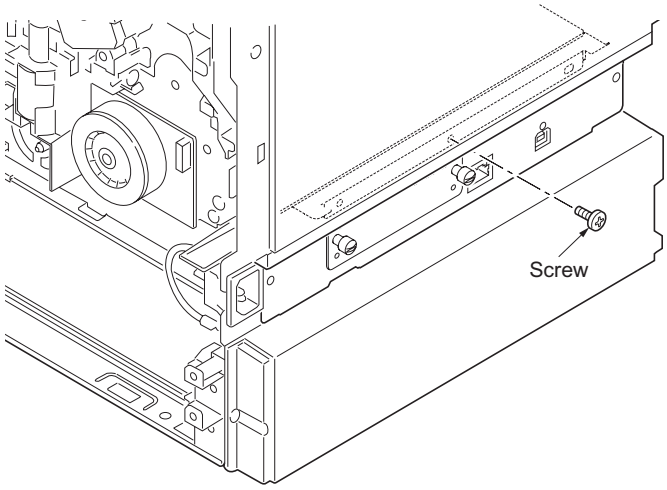

Figure 1-5-49

11. Remove the high voltage PWB assembly.

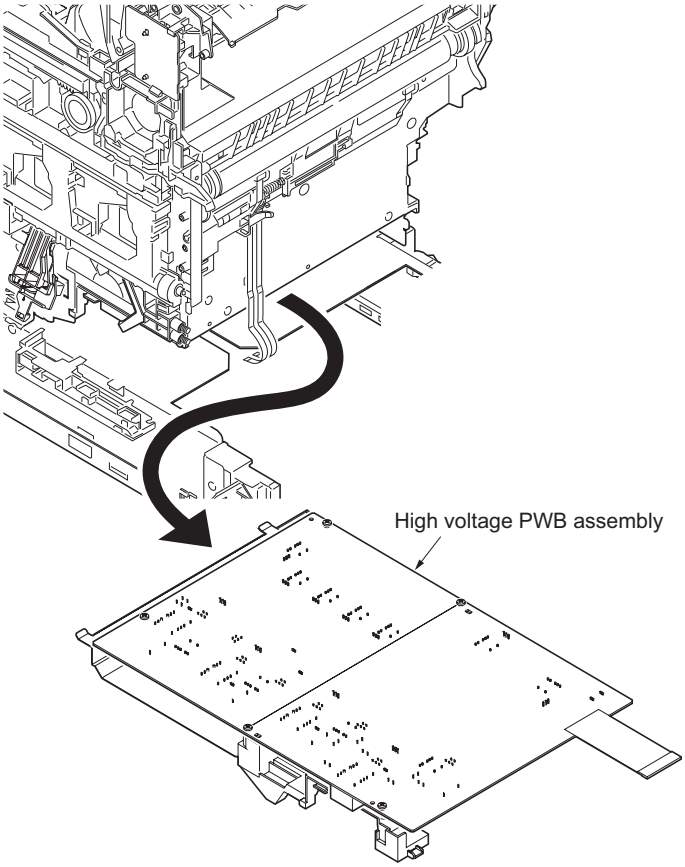

Figure 1-5-50

12. Remove five screws and then remove the high voltage PWB.
13. Check or replace the high voltage PWB and refit all the removed parts.

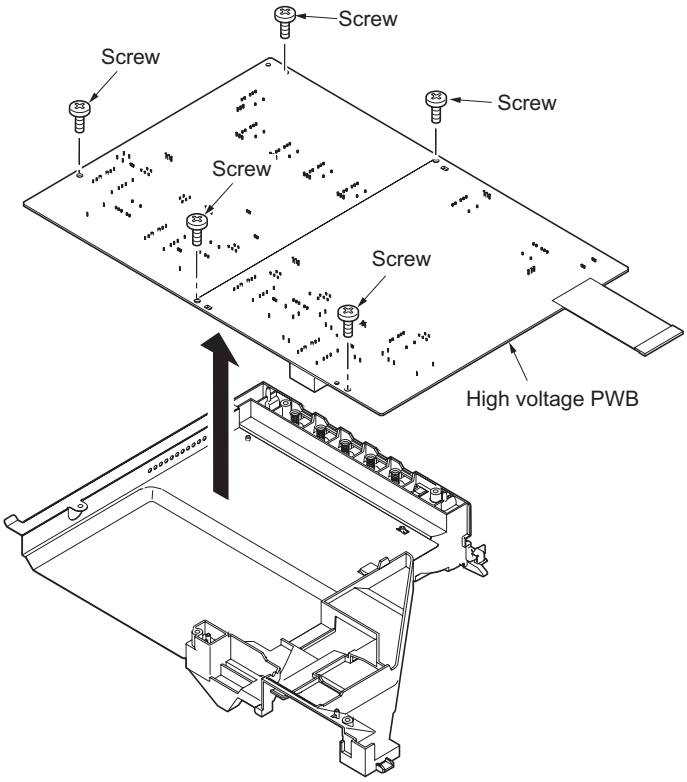

Figure 1-5-51

1-5-9 Others

(1) Detaching and refitting the laser scanner unit

Procedure

1. Remove the all drum units (See page 1-5-15).
2. Remove the all developing units (See page 1-5-13).
3. Remove the two connectors.
4. Remove the wires form the three clamps.

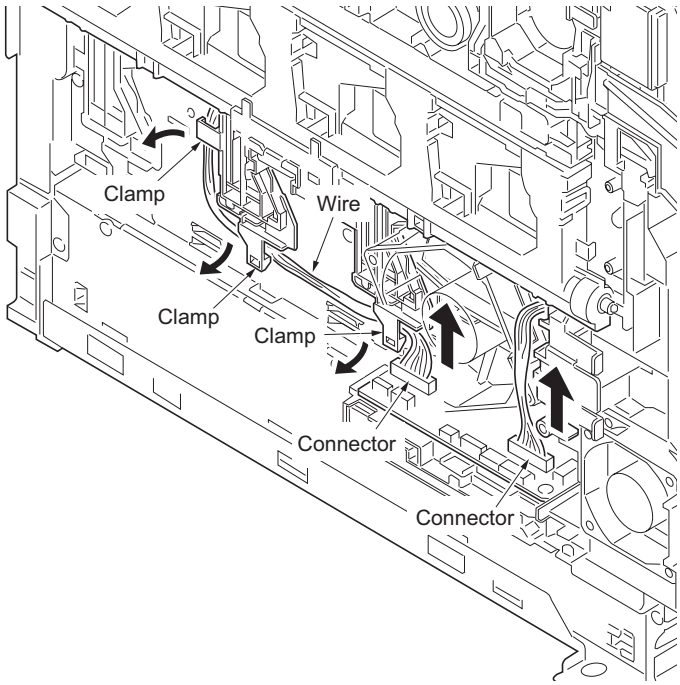

Figure 1-5-52

5. Draw the two connectors into the printer inside.

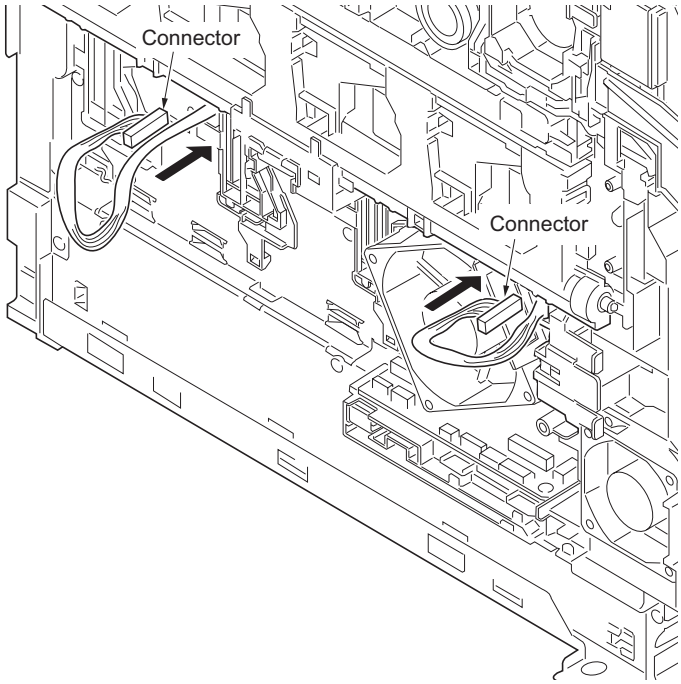

Figure 1-5-53

6. Remove the each three screws and then remove the laser scanner units (MC,YK).
7. Check or replace the laser scanner units and refit all the removed parts.

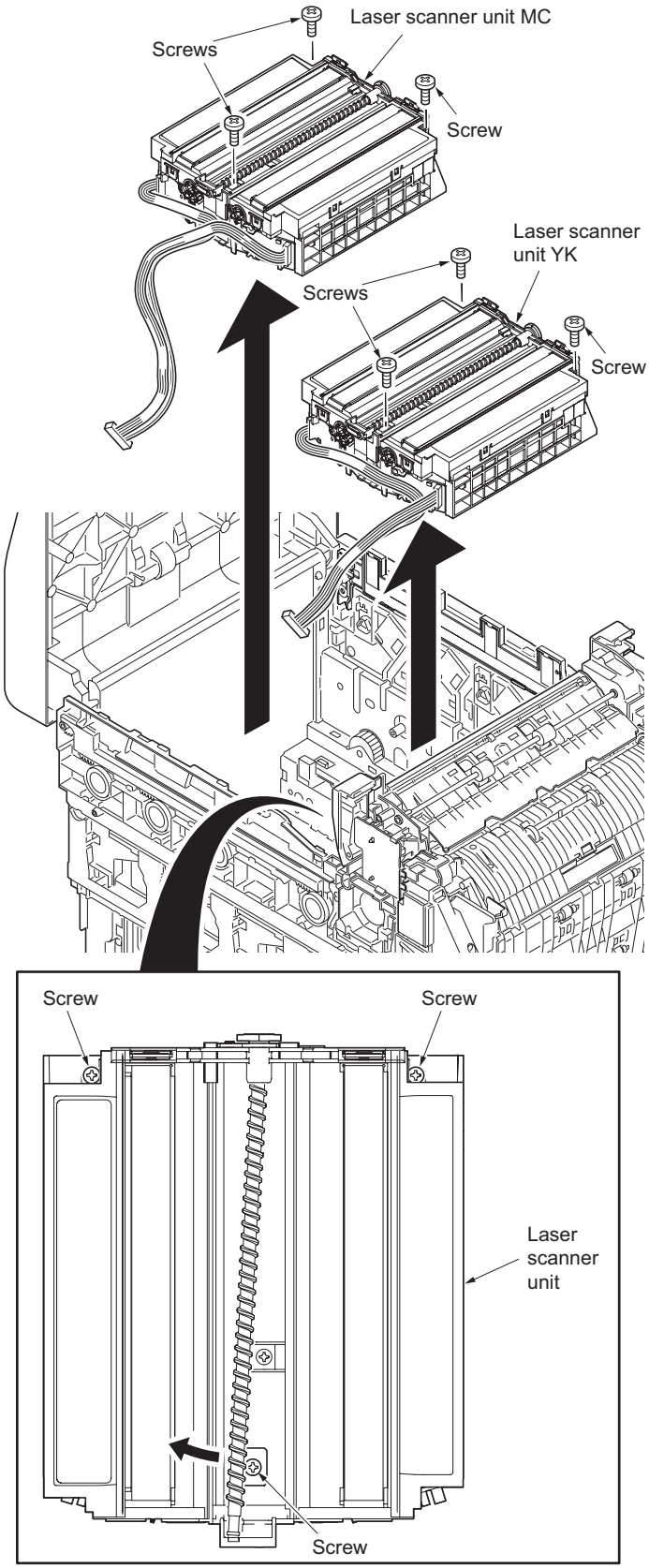

Figure 1-5-54

(2) Detaching and refitting the ozone filter

Procedure

1. Open the right cover.
2. Remove the ozone filter.
3. Check or replace the ozone filter and refit all the removed parts.

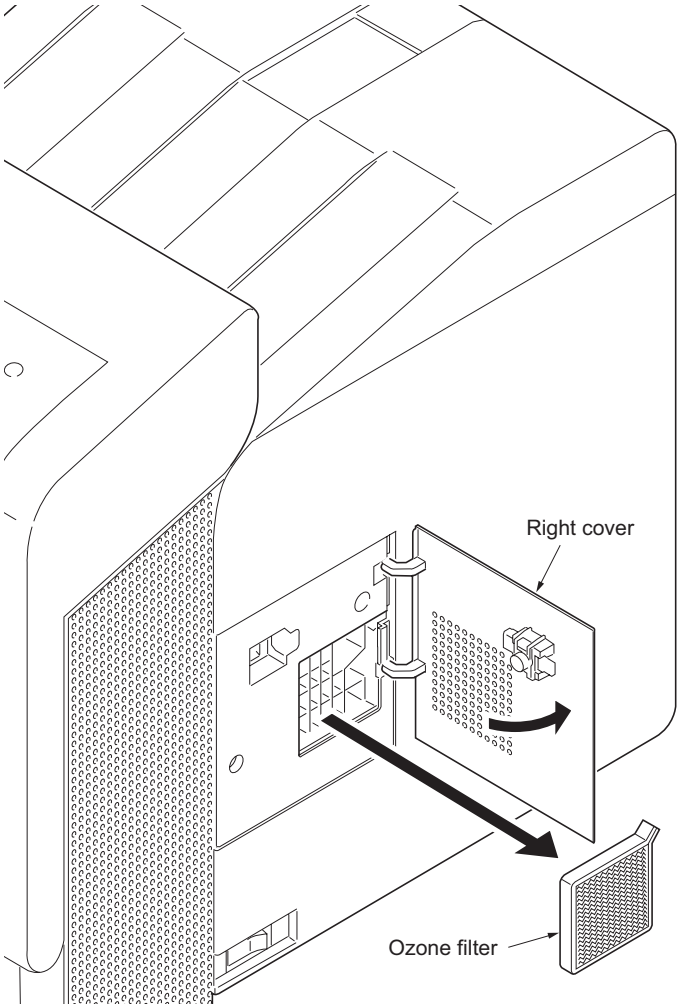

Figure 1-5-55

(3) Direction of installing the principal fan motors

When detaching or refitting the developing fan motor 1, developing fan motor 2, fuser fan motor 1 or ozone fan motor, be careful of the airflow direction (intake or exhaust).

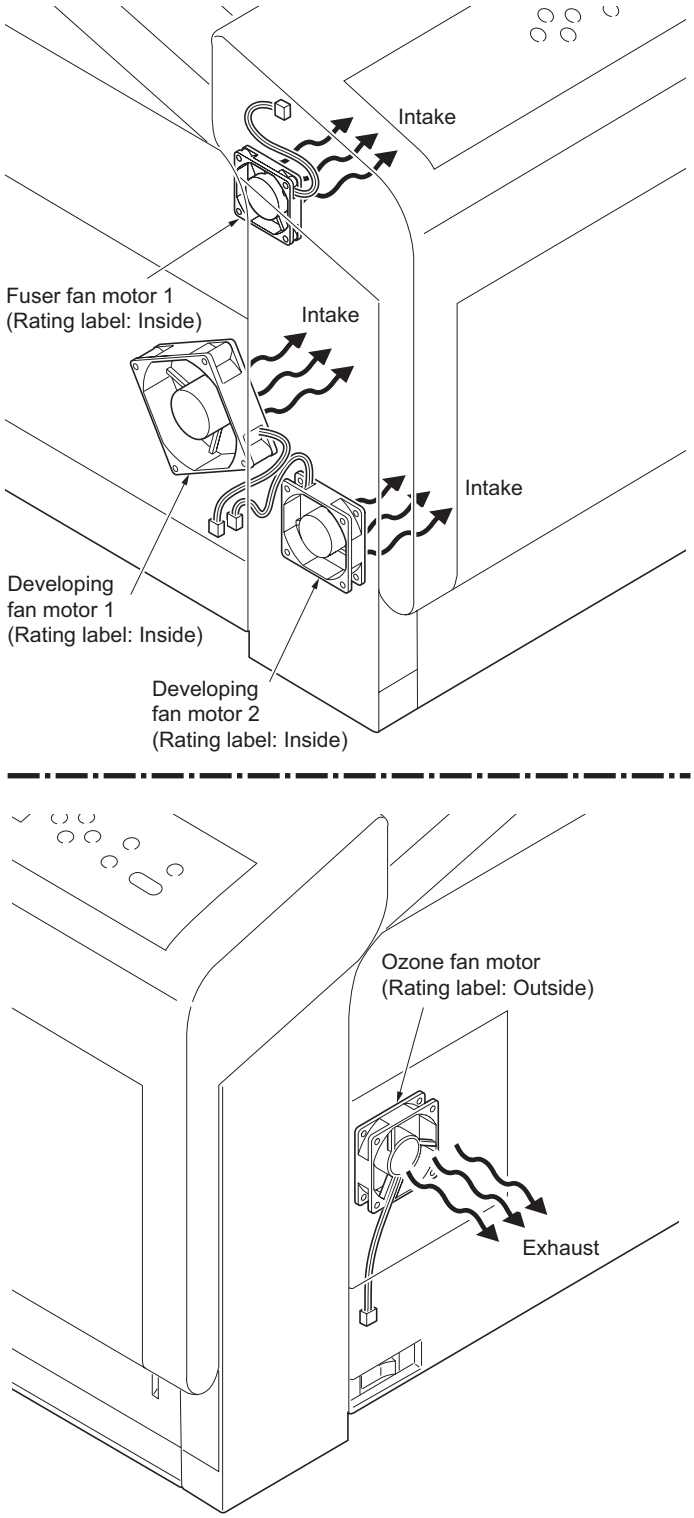

Figure 1-5-56

This page is intentionally left blank.

1-6-1 Downloading firmware

(1) Firmware file

Firmware files are named after the following codes:

Firmware file name example

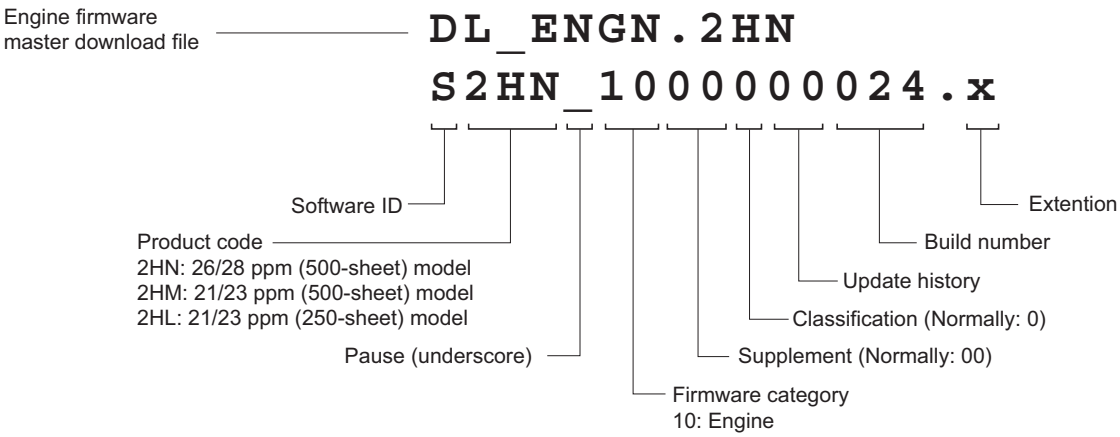

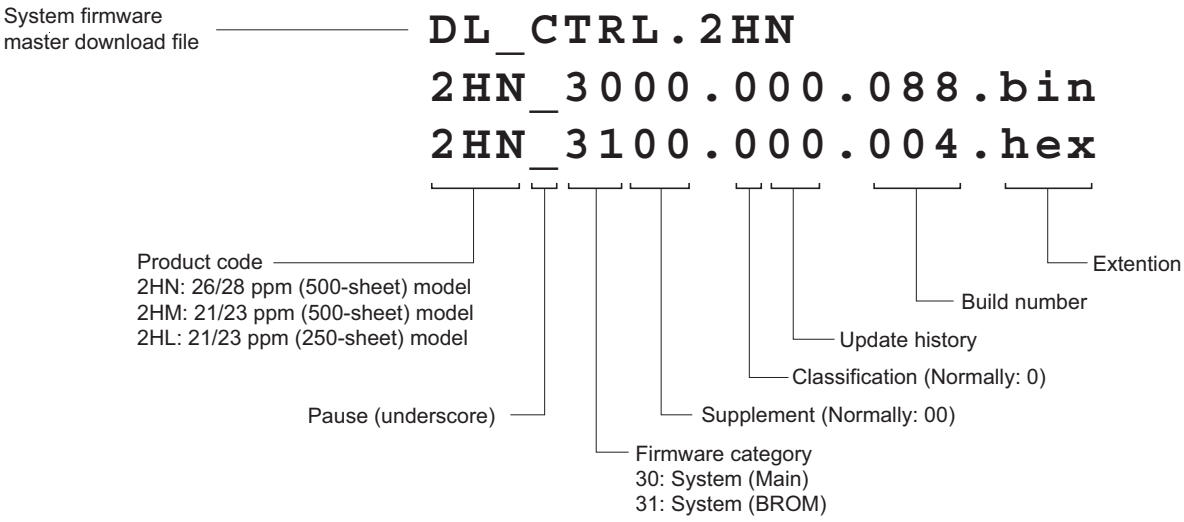

Figure 1-6-1

(2) Downloading the firmware from the USB memory

To download data written in a USB memory to the printer, proceed as explained in this section.

CAUTION
Downloading firmware takes several minutes. Do not turn power off during downloading.

Procedure

1. Turn printer power off.
2. Insert the USB memory to the PC's USB slot.
3. Copy the firmware file to download to the root directory of the USB memory.
4. Remove the USB memory from the PC's USB slot.
5. Insert the USB memory into the printer's USB memory slot.

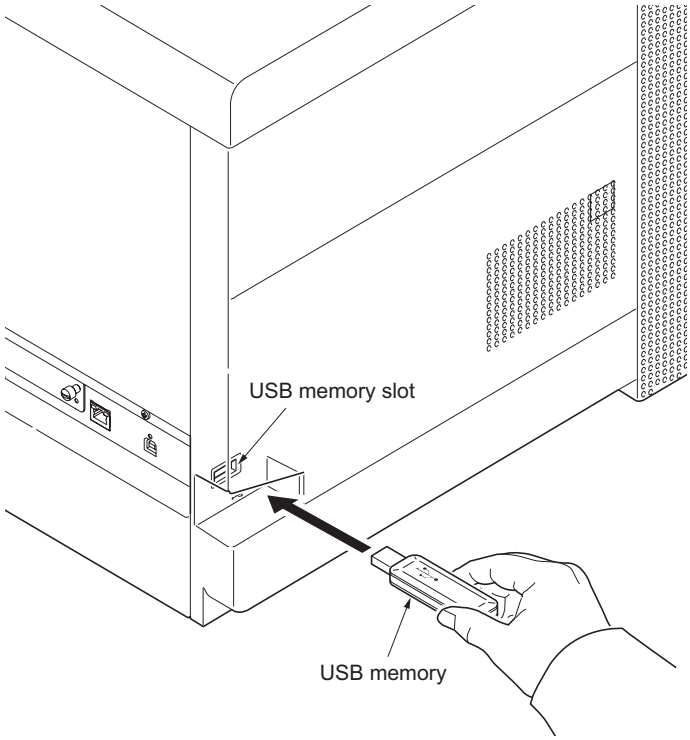

Figure 1-6-2

6. Turn printer power on.
7. When message display (1) is displayed to detect firmware in the USB memory.
8. Message display (2) is displayed during downloading.
9. When message display (3) is displayed to indicate downloading is finished.

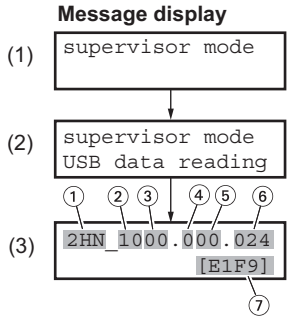

① Product code
② Firmware category
10: Engine
30: System
31: System (BROM)
③ Supplement (Normally: 00)
④ Classification (Normally: 0)
⑤ Update history
⑥ Build number
⑦ Checksum

Figure 1-6-3

10. Turn printer power off.
11. Remove the USB memory from USB memory slot.
12. Turn printer power on.
13. Print the status page to check that the firmware version has been updated (See page P.1-3-2).

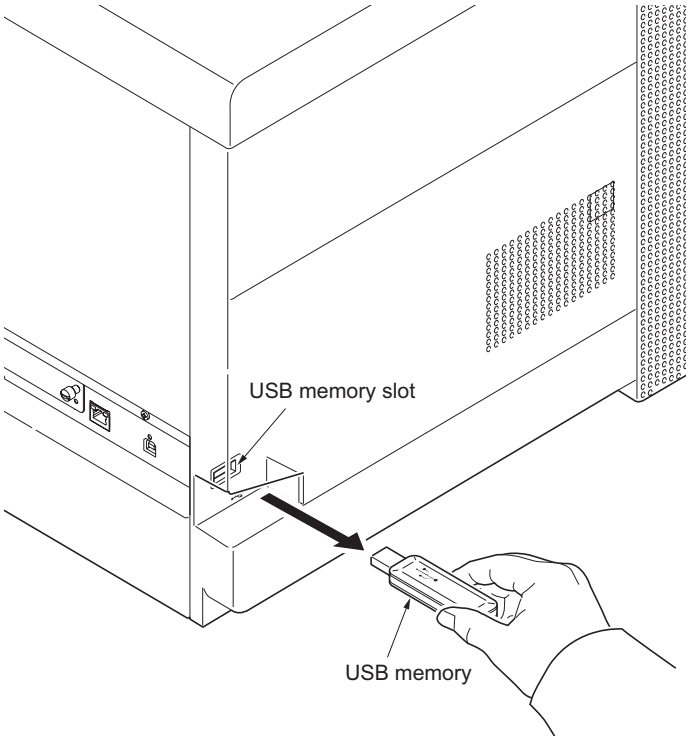

Figure 1-6-4

(3) Downloading the firmware from the memory card

To download data written in a memory card (CompactFlash) to the printer, proceed as explained in this section.

CAUTION
Downloading firmware takes several minutes. Do not turn power off during downloading.

Procedure

1. Turn printer power off.
2. Remove the two screws and then remove the main PWB.
3. Insert the memory card into the memory card socket.
4. Re fit the main PWB.

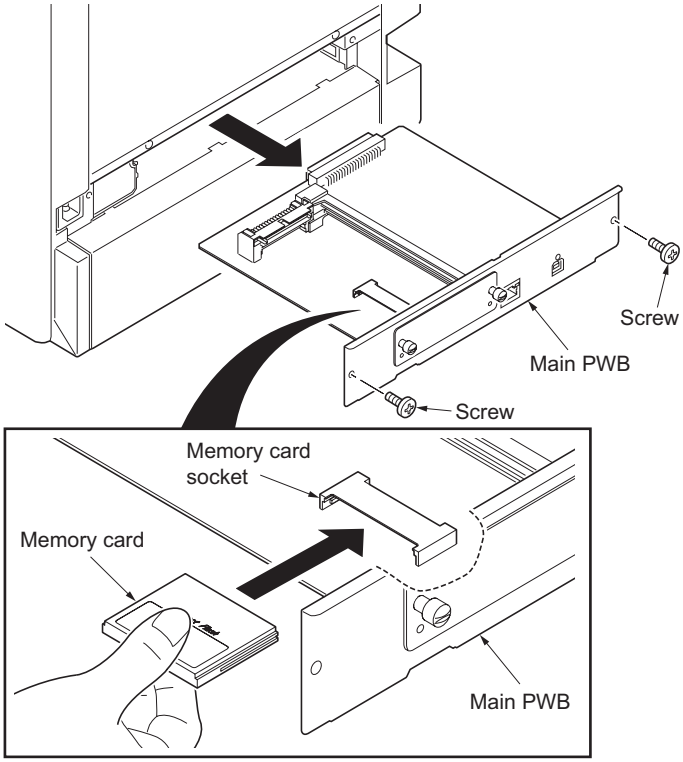

Figure 1-6-5

5. Turn printer power on.
6. Press MENU key on the printer's operation panel and carry out the memory card formatting procedure (1).
7. When formatting is complete, turn printer power off.

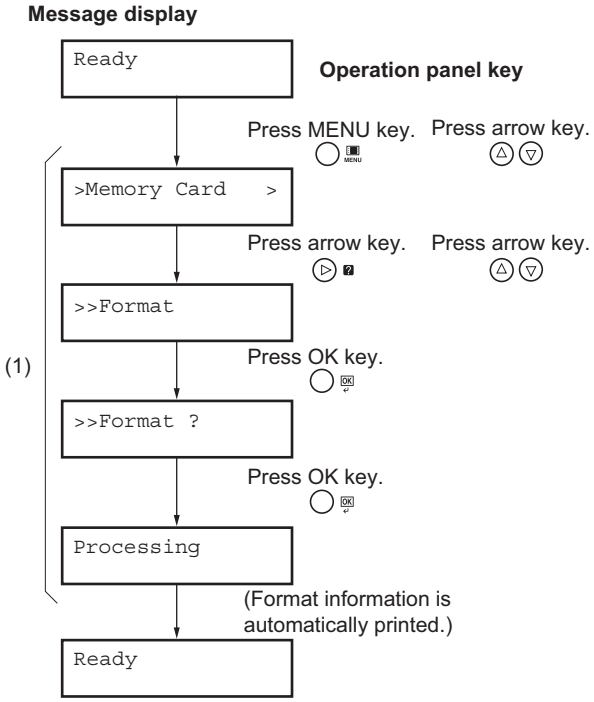

Figure 1-6-6

8. Remove the two screws and then remove the main PWB.
9. Remove the formatted memory card from the memory card socket.

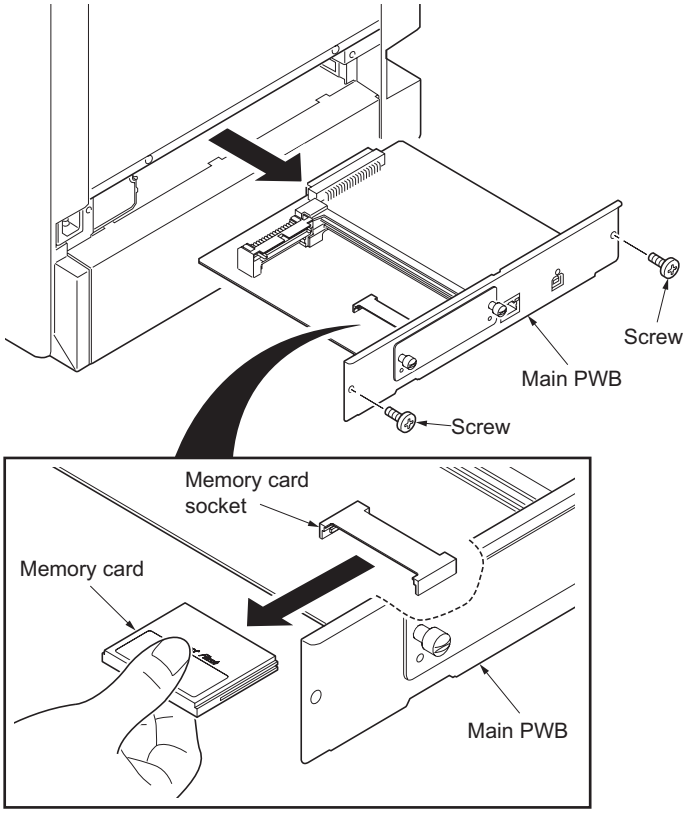

Figure 1-6-7

10. Insert the memory card to the PC's slot or to the adaptor.
11. Copy the firmware file to download to the root directory of the memory card.
12. Remove the memory card from the PC's slot or the adaptor.

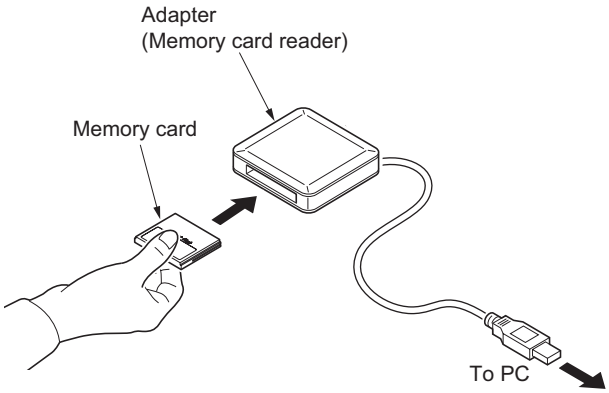

Figure 1-6-8

13. Insert the memory card into the memory card socket.
14. Refit the main PWB.

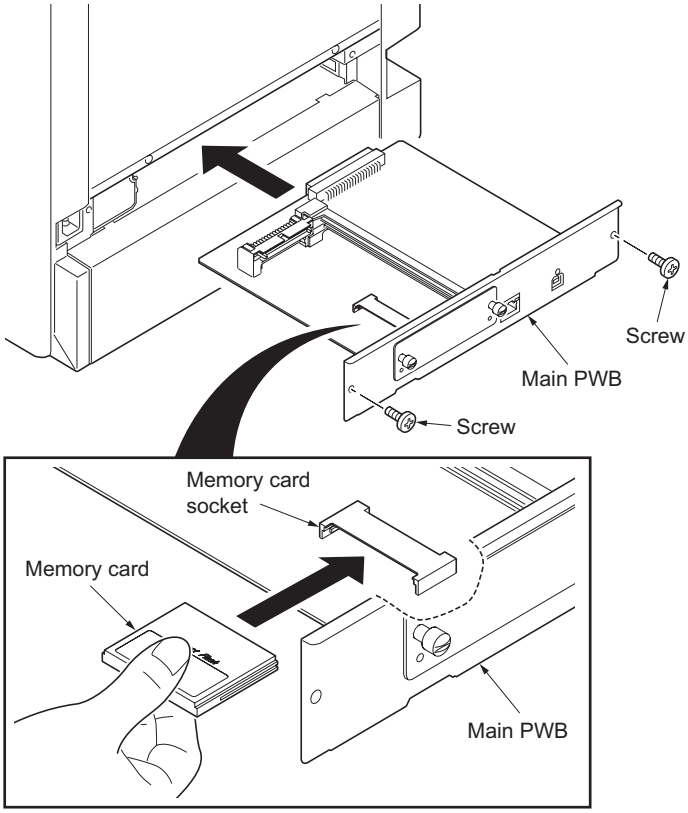

Figure 1-6-9

15. Turn printer power on.
16. When message display (1) is displayed to detect firmware in the memory card.
17. Message display (2) is displayed during downloading.
18. When message display (3) is displayed to indicate downloading is finished.

Message display

(1) `supervisor mode`

(2) `supervisor mode`
`USB data reading`

(3) ① ② ③ ④ ⑤ ⑥
`2HN_1000.000.024`
`[E1F9]`
⑦

① Product code
② Firmware category
10: Engine
30: System
31: System (BROM)
③ Supplement (Normally: 00)
④ Classification (Normally: 0)
⑤ Update history
⑥ Build number
⑦ Checksum

Figure 1-6-10

19. Turn printer power off.
20. Remove the two screws and then remove the main PWB.
21. Remove the memory card from memory card socket.
22. Refit the main PWB.
23. Turn printer power on.
24. Print the status page to check that the firmware version has been updated (See page P.1-3-2).

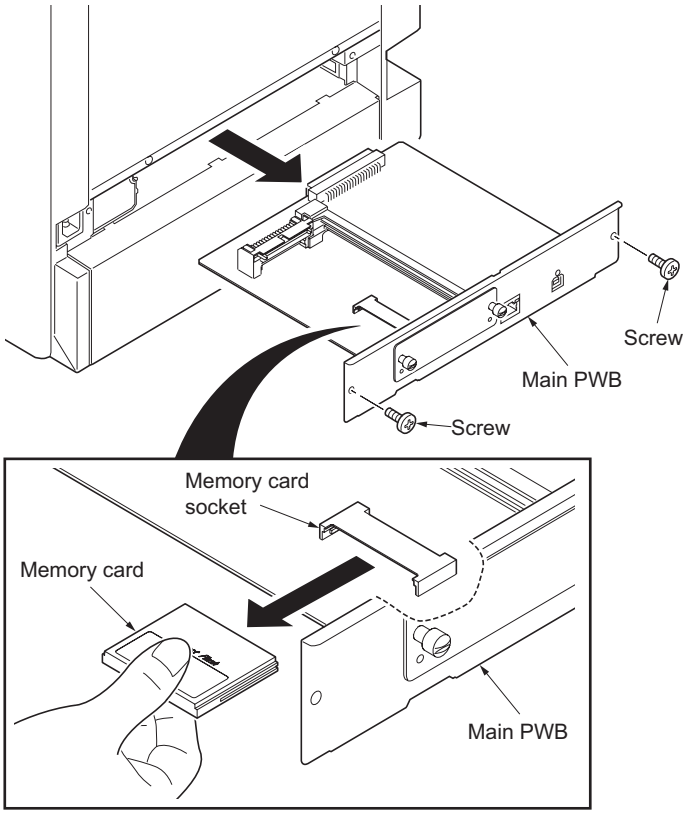

Figure 1-6-11

This page is intentionally left blank.

2-1-1 Paper feed/conveying section

Paper feed/conveying section consists of the paper feed unit that feeds paper from the cassette and the MP tray paper feed unit that feeds paper from the MP tray, and the paper conveying section that conveys the fed paper to the transfer/separation section.

(1) Cassette paper feed section

The cassette can contain 500/250 sheets. The sheet from the cassette is pulled out by rotation of the pickup roller and sent to the paper conveying section by rotation of the paper feed roller. Also the retard roller prevents multiple feeding of paper.

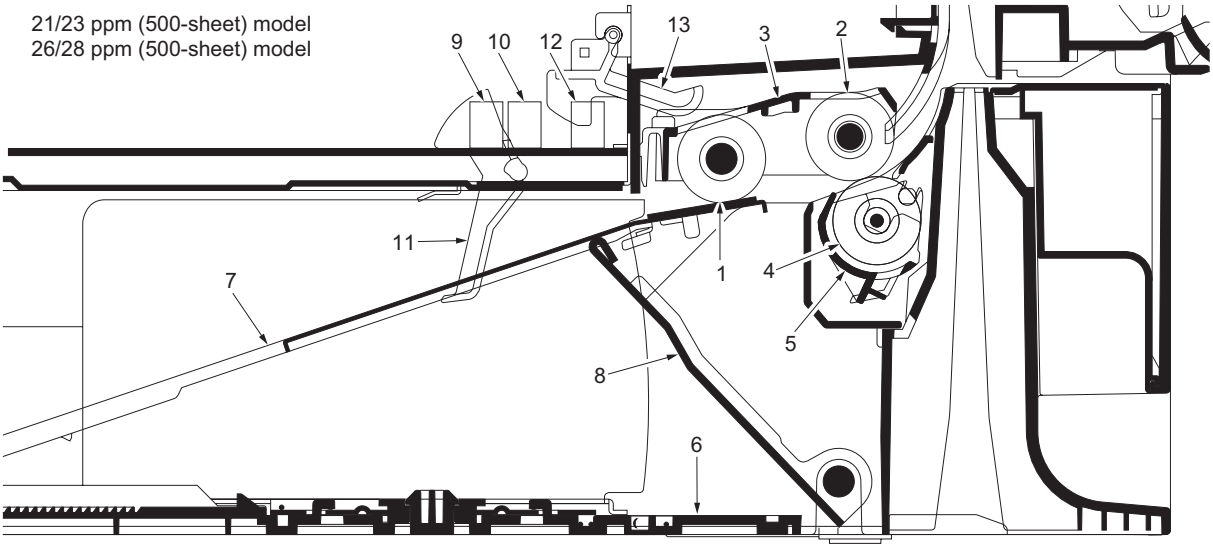

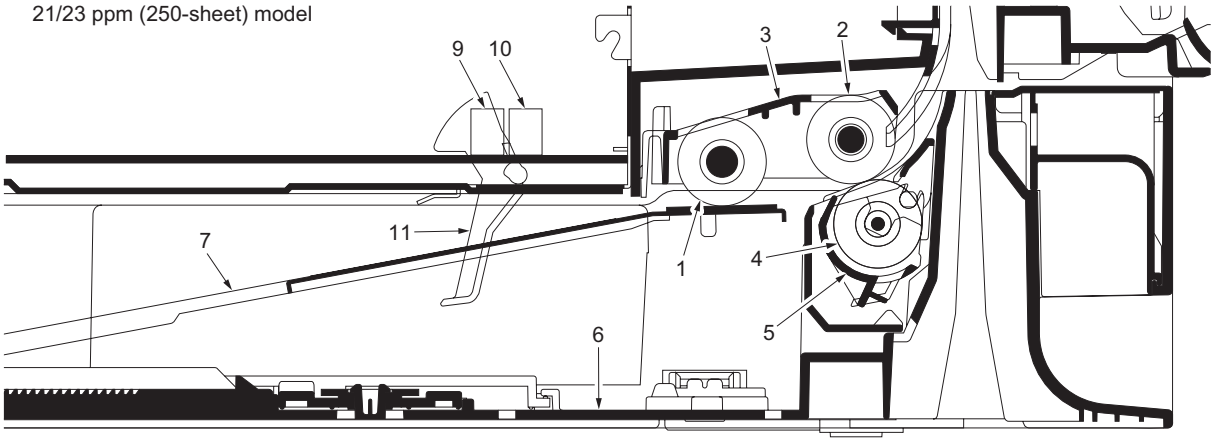

Figure 2-1-1 Cassette paper feed section

(1) Pickup roller
(2) Paper feed roller
(3) Paper feed holder
(4) Retard roller
(5) Retard holder
(6) Cassette base
(7) Bottom plate
(8) Lift work plate
(9) Paper sensor 1
(10) Paper sensor 2
(11) Actuator (paper sensor 1, 2)
(12) Lift limit sensor
(13) Actuator (lift limit sensor)

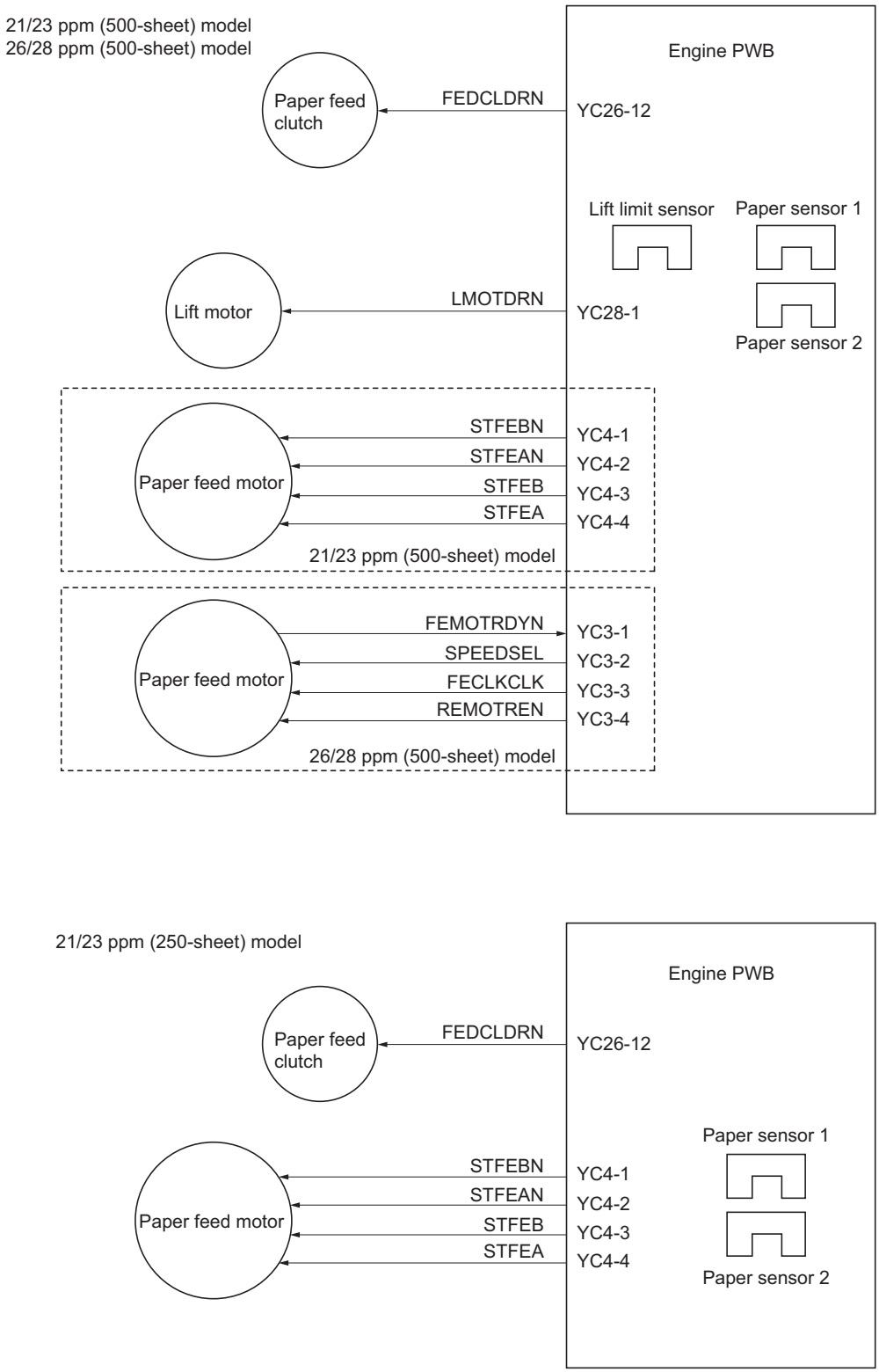

Figure 2-1-2Cassette paper feed section block diagram

(2) MP tray paper feed section

The MP tray can contain about 150 pages. Feeding from the MP tray is performed by the rotation of the MP paper feed roller. Also, function of the MPF separation pad prevents paper from multiple feeding.

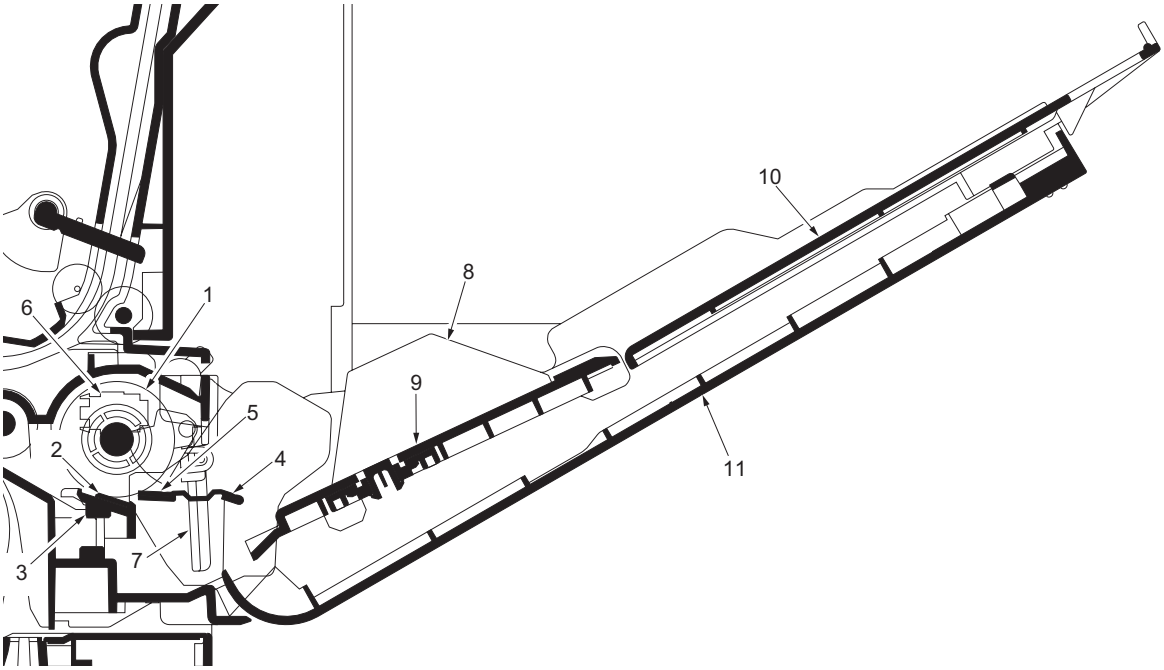

Figure 2-1-3 MP tray paper feed section

(1)	MP paper feed roller	(5)	MPF friction pad	(9)	MPF base
(2)	MPF separation pad	(6)	MP tray sensor	(10)	MPF upper tray
(3)	MPF separator	(7)	Actuator (MP tray sensor)	(11)	MPF cover
(4)	MPF bottom plate	(8)	MPF guide R/L		

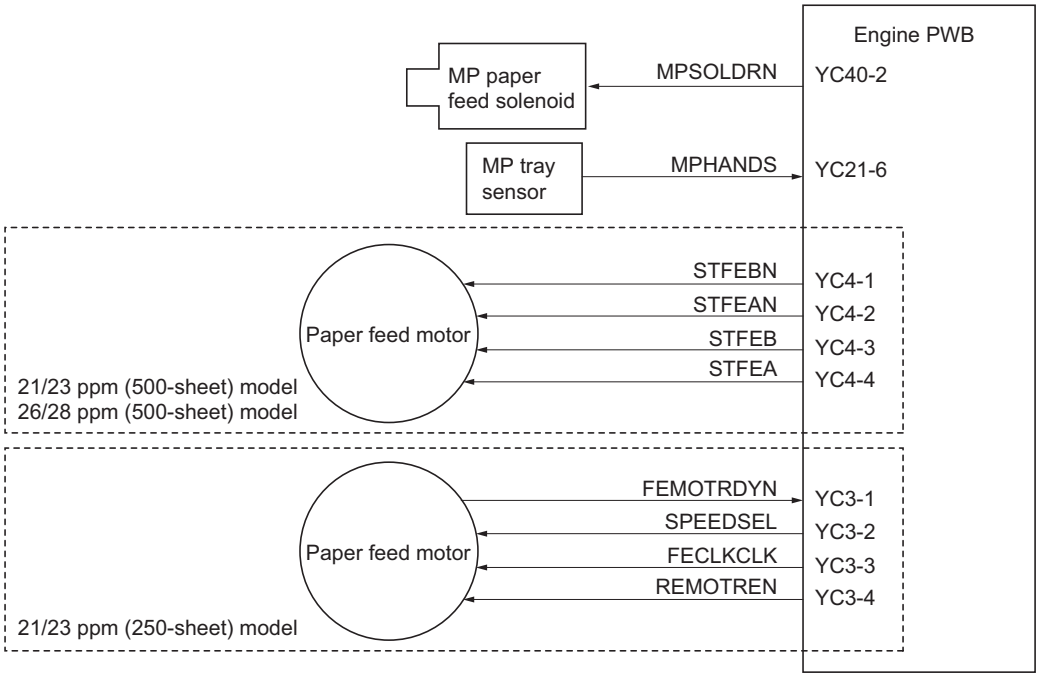

Figure 2-1-4 MP tray paper feed section block diagram

(3) Paper conveying section

The paper conveying section conveys paper to the transfer/separation section as paper feeding from the cassette or MP tray, or as paper refeeding for duplex printing. Paper by feeding is conveyed by the middle roller to the position where the registration sensor is turned on, and then sent to the transfer/separation section by the front registration roller and rear registration roller.

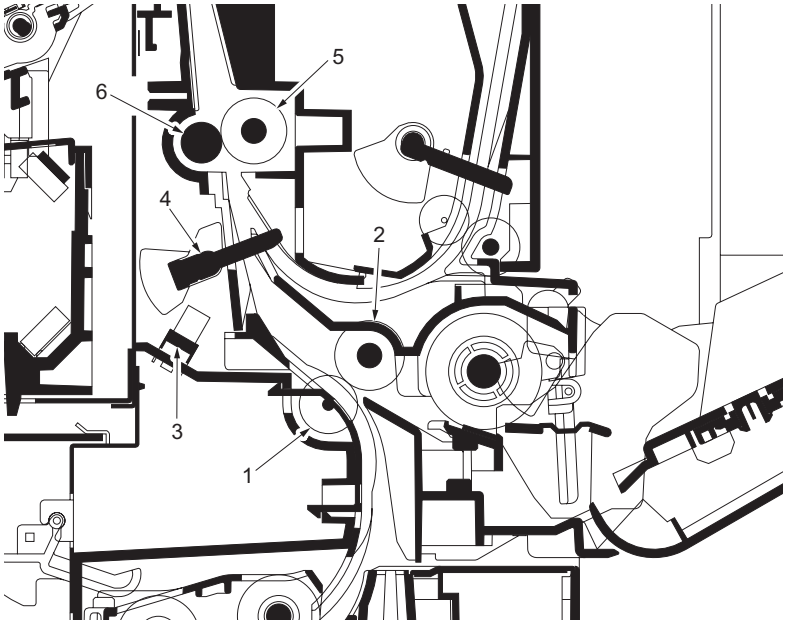

Figure 2-1-5 Paper conveying section

(1) Feed pulley
(2) Middle roller
(3) Registration sensor
(4) Actuator (registration sensor)
(5) Front registration roller
(6) Rear registration roller

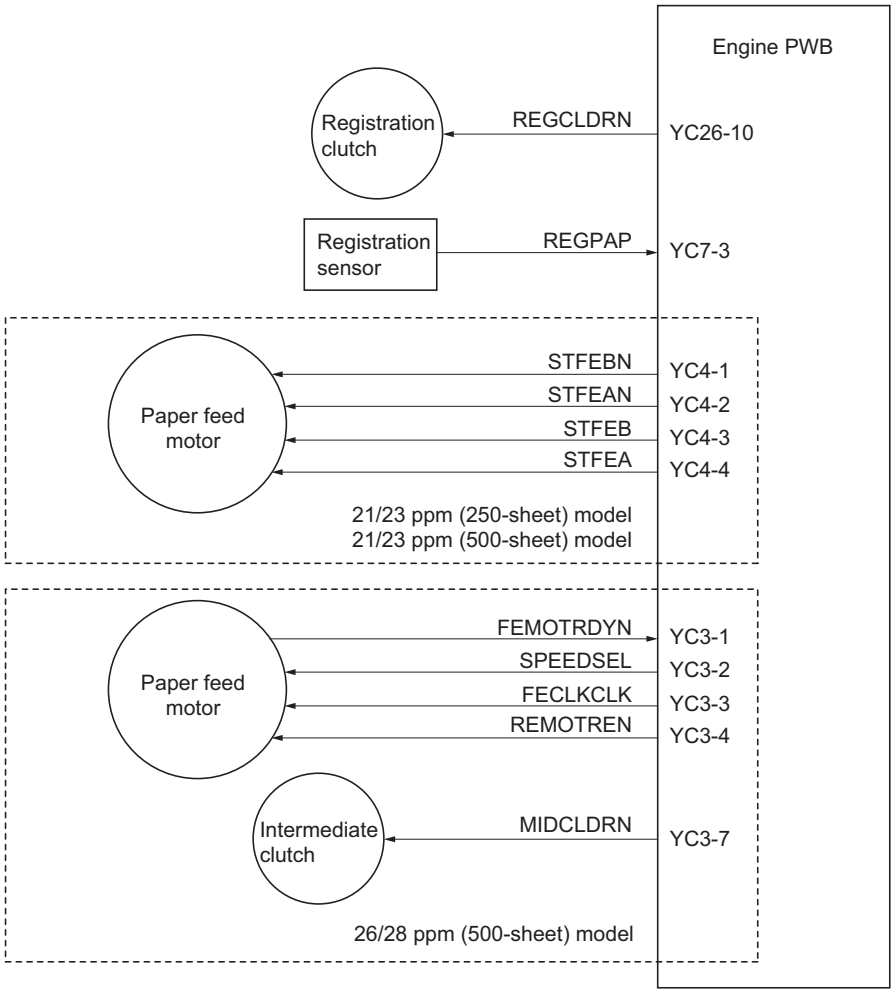

Figure 2-1-6 Paper conveying section block diagram

2-1-2 Drum section

(1) Drum section

The drum section consists of the drum, the main charger unit, and the cleaning unit, and the drum surface is uniformly charged in preparation for formation of residual image by laser beam. After transfer is complete, toner remaining on the drum surface is chipped off with the cleaning blade and is collected to the waste toner box with the drum screw. Also electric charge remaining on the drum surface is eliminated by irradiating the eraser lamp for preparing for next charge of the main charger.

.

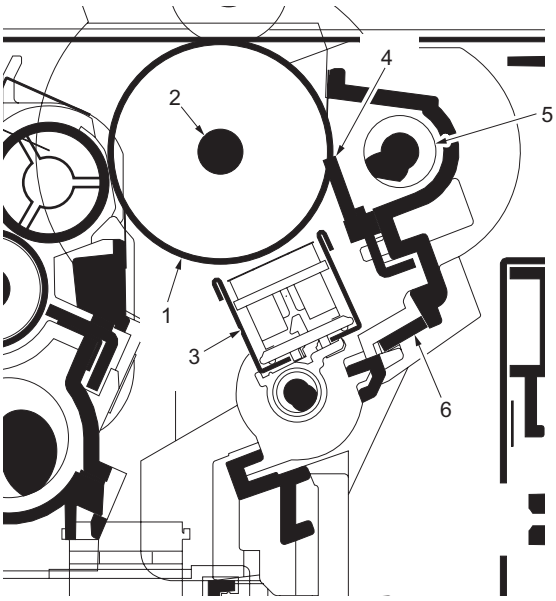

Figure 2-1-7 Drum section

(1) Drum
(2) Drum shaft
(3) Main charger unit
(4) Cleaning blade
(5) Drum screw
(6) Eraser lamp

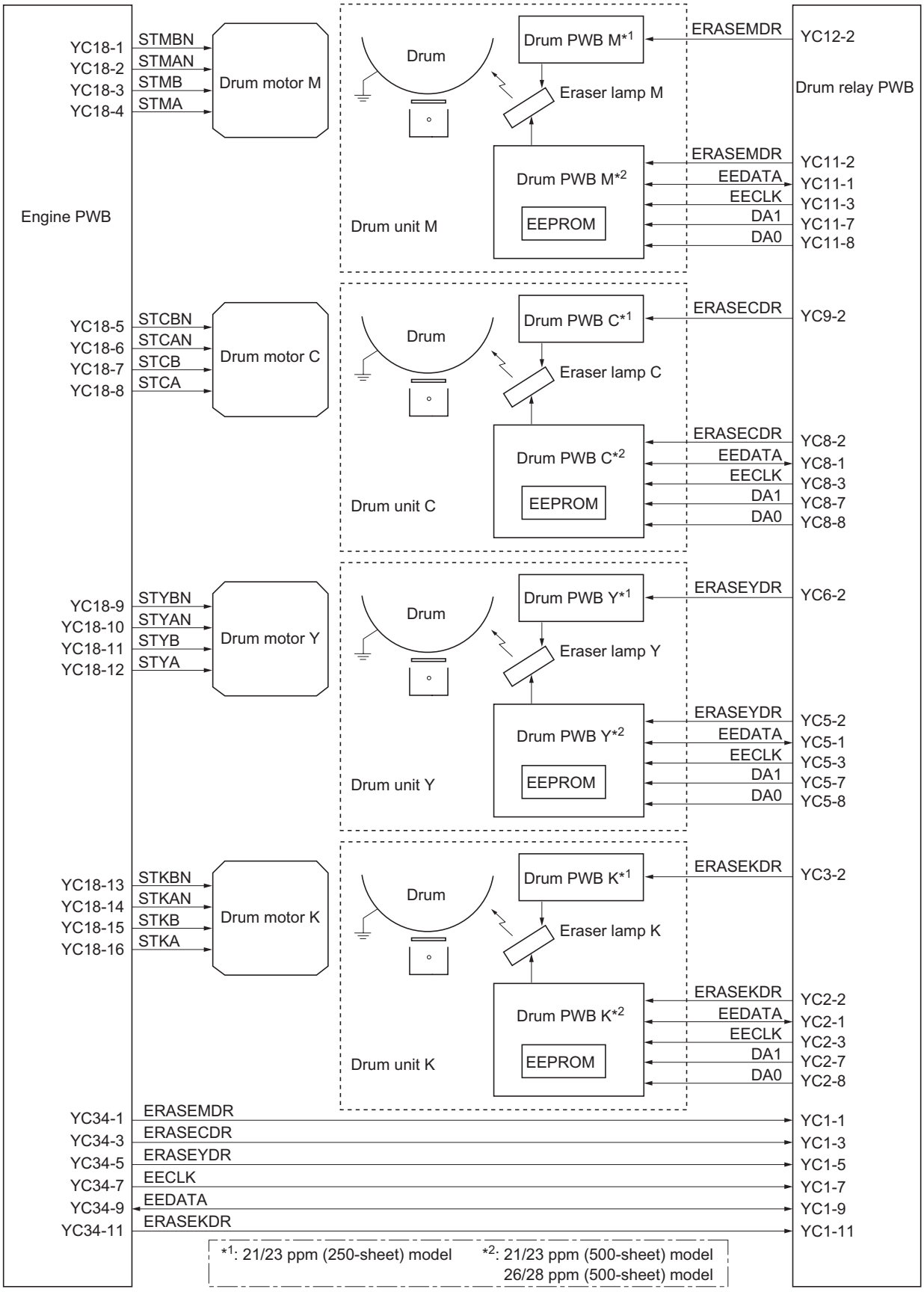

Figure 2-1-8 Drum section block diagram

(2) Main charger unit

The main charger unit consists of the main charger wire, the main charger grid, and the main charger shield, and charges the drum for image forming. Also the main charger unit is equipped with a main charger cleaning motor to conduct cleaning automatically.

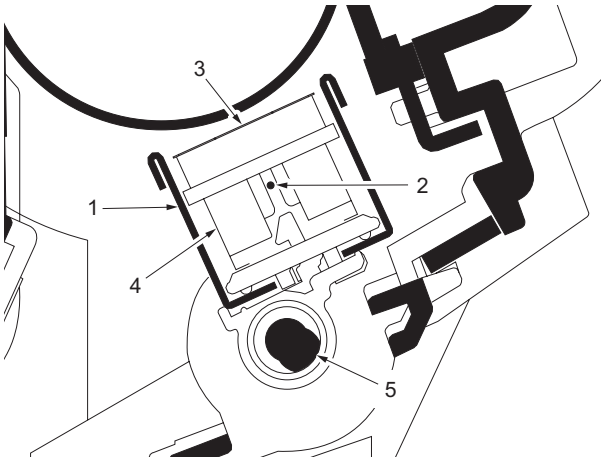

Figure 2-1-9 Main charger unit

(1) Main charger shield
(2) Main charger wire
(3) Main charger grid
(4) Main charger cleaner unit
(5) Main charger spiral

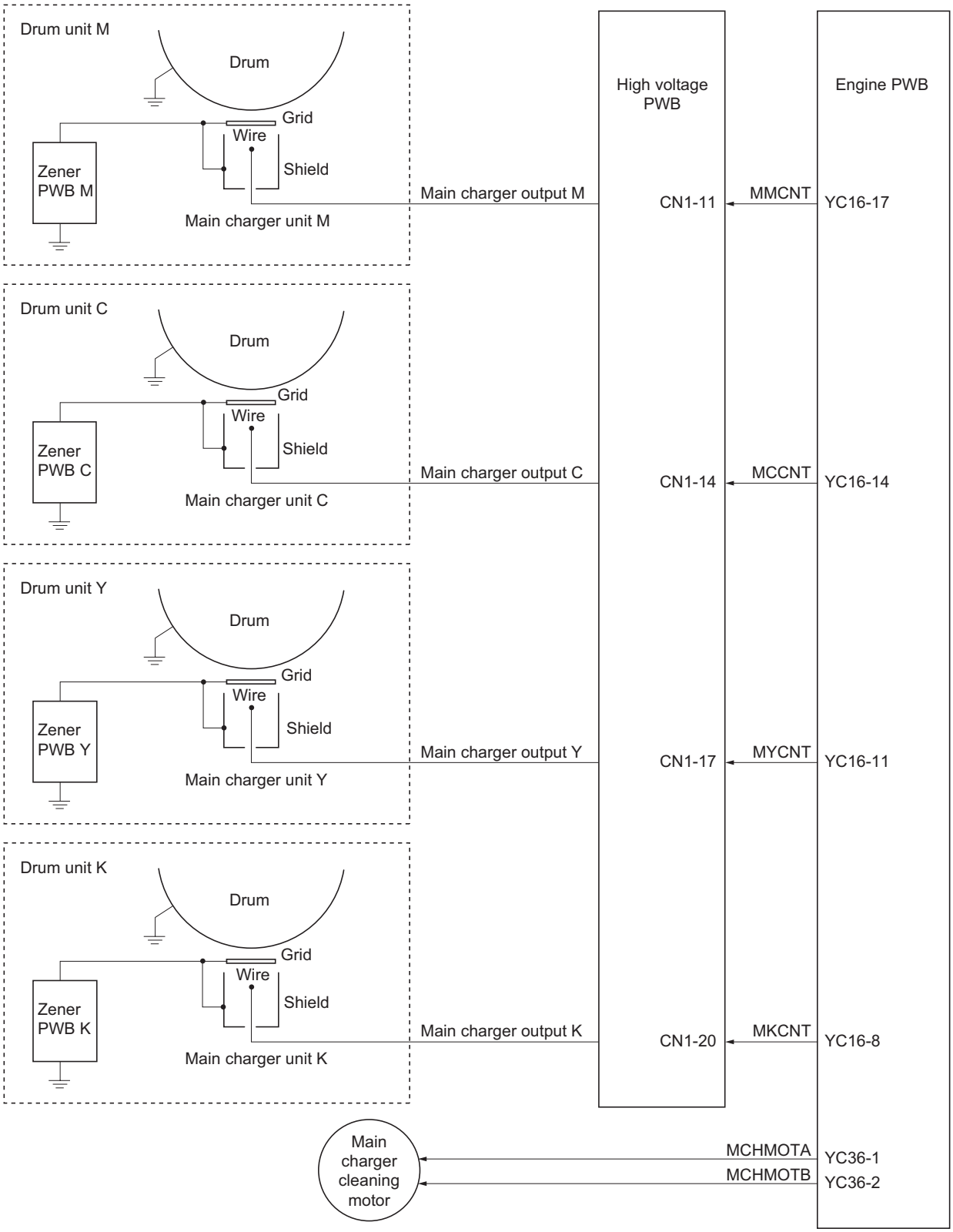

Figure 2-1-10Main charger unit block diagram

2-1-3 Expose section

(1) Laser scanner unit

The charged surface of the drum is then scanned by the laser beam from the laser scanner unit. The laser beam is dispersed as the polygon motor revolves to reflect the laser beam over the drum. Various lenses and mirror are housed in the laser scanner unit, adjust the diameter of the laser beam, and focalize it at the drum surface. Also the LSU cleaning motor is activated to conduct automatically cleaning of the LSU dust shield glass.

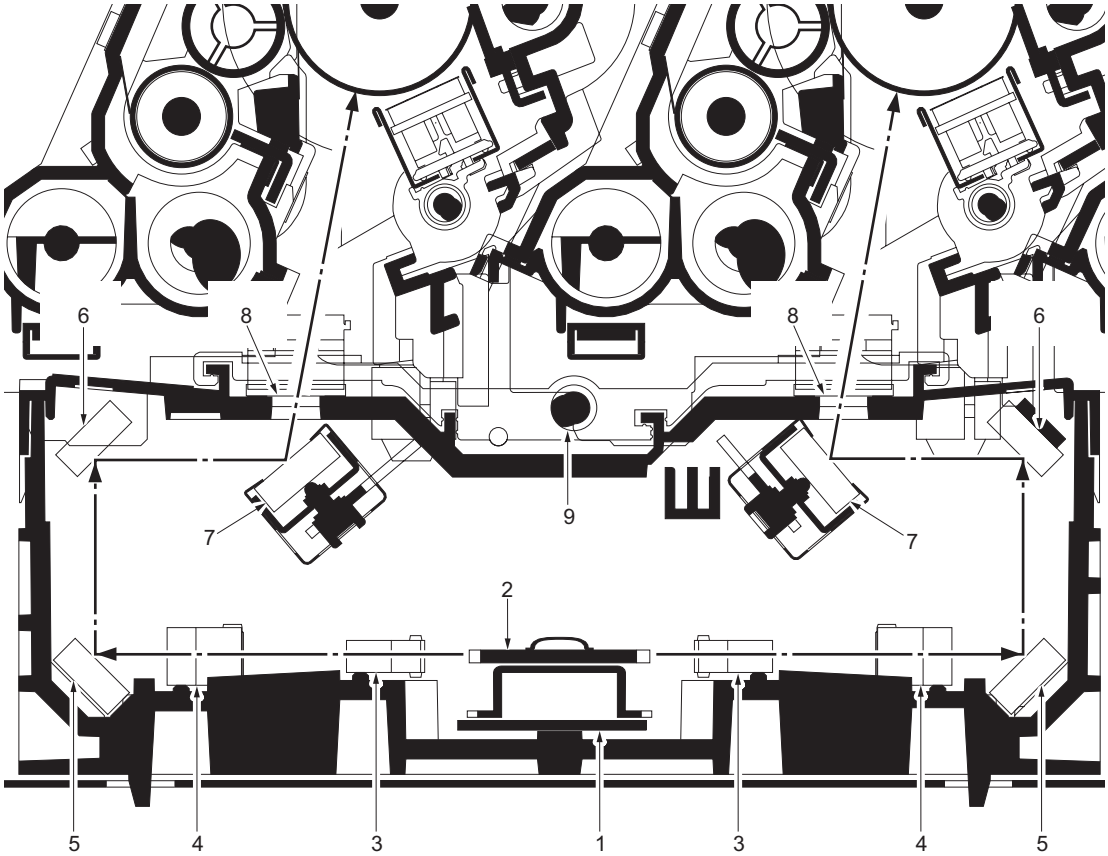

Figure 2-1-11 Laser scanner unit

(1)	Polygon motor	(6)	Mirror B
(2)	Polygon mirror	(7)	Mirror C
(3)	F-θ lens A	(8)	LSU dust shield glass
(4)	F-θ lens B	(9)	LSU spiral
(5)	Mirror A		

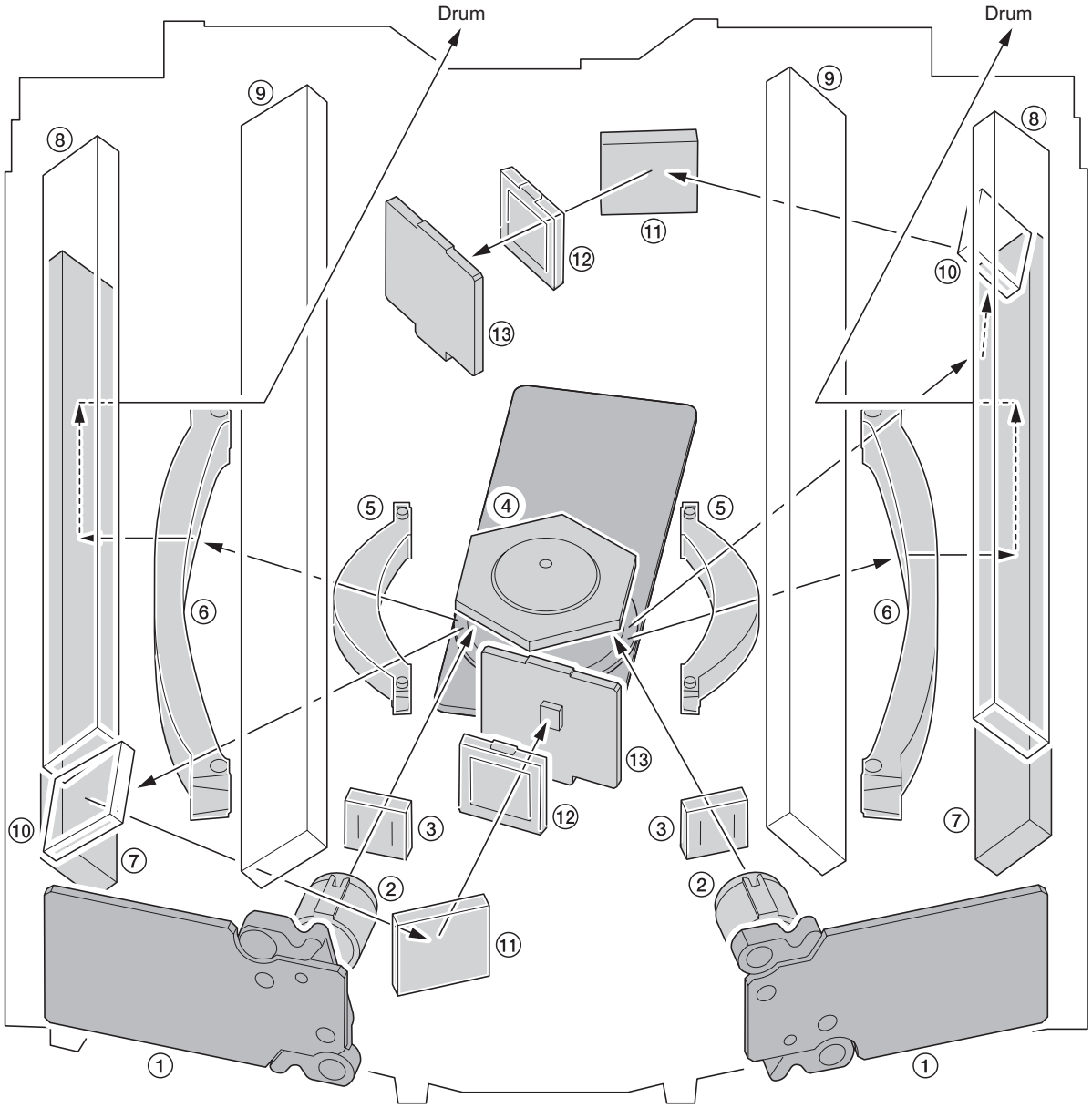

Figure 2-1-12 Laser scanner unit

(1) APC PWB (Laser diode)
(2) Collimator lens
(3) Cylindrical lens
(4) Polygon motor (mirror)
(5) F-θ lens A
(6) F-θ lens B
(7) Mirror A
(8) Mirror B
(9) Mirror C
(10) PD mirror
(11) PD mirror
(12) SOS lens
(13) PD PWB (Pin photo diode sensor)

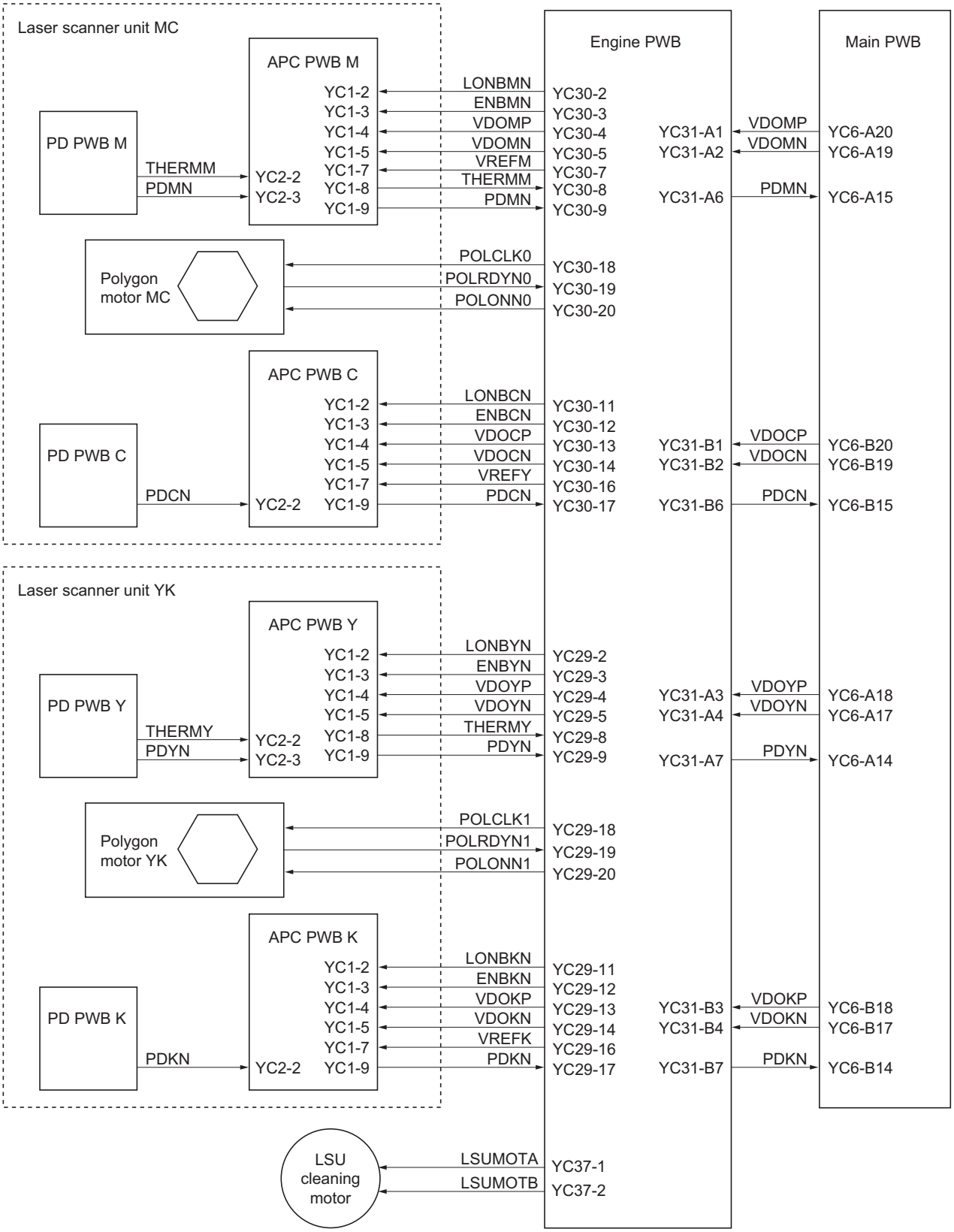

Figure 2-1-13Expose section block diagram

2-1-4 Developing section

The developing unit consists of the sleeve roller that forms the magnetic brush, the magnet roller, the developing blade and the developing screws that agitate the toner. Also, the toner sensor checks whether or not toner remains in the developing unit.

21/23 ppm (500-sheet) model
26/28 ppm (500-sheet) model

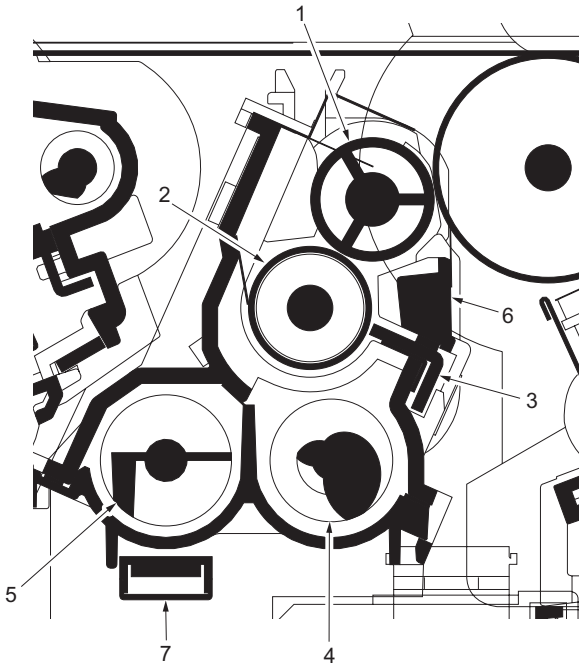

21/23 ppm (250-sheet) model

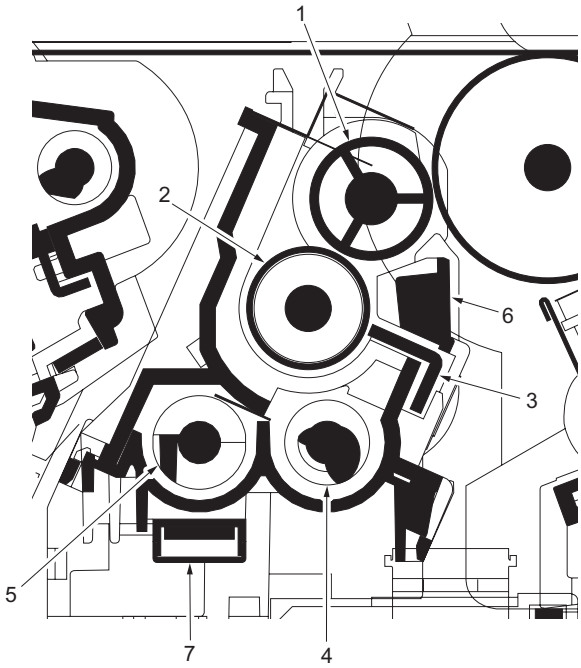

Figure 2-1-14 Developing unit and toner container

(1) Sleeve roller
(2) Magnet roller
(3) Developing blade
(4) Developing screw A
(5) Developing screw B
(6) Sleeve cover
(7) Toner sensor

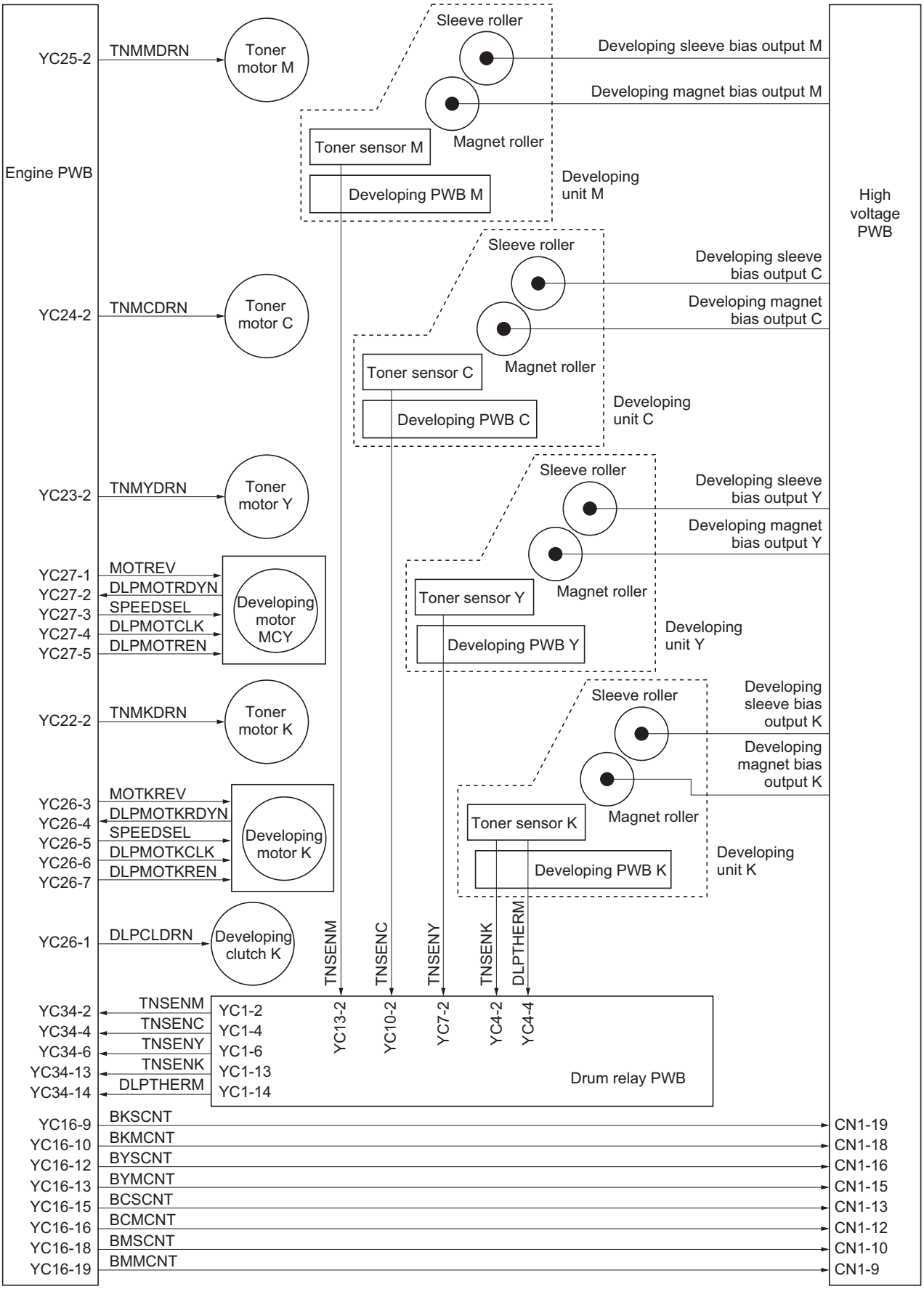

Figure 2-1-15 Developing section block diagram

2-1-5 Transfer/separation section

The transfer/separation section consists of the intermediate transfer unit and the transfer roller unit. The intermediate transfer unit consists of the transfer cleaning unit, the transfer belt, and the four primary transfer rollers for respective color drums, and forms a full-color toner image by superimposing and transferring single-color toner images formed on each drum onto the transfer belt. Also with the left and right ID sensors mounted on the machine frame, the toner density on the transfer belt is measured. The transfer cleaning unit collects toner remaining on the transfer belt after secondary transfer and forwards it as waste toner to the waste toner box. The transfer roller unit consists of the secondary transfer roller mounted to the paper conveying unit and the separation brush. To the secondary transfer roller, DC bias is applied from the high voltage PWB. The toner image formed on the transfer belt is transferred to the paper by the potential difference and the paper is separated by curvature separation.

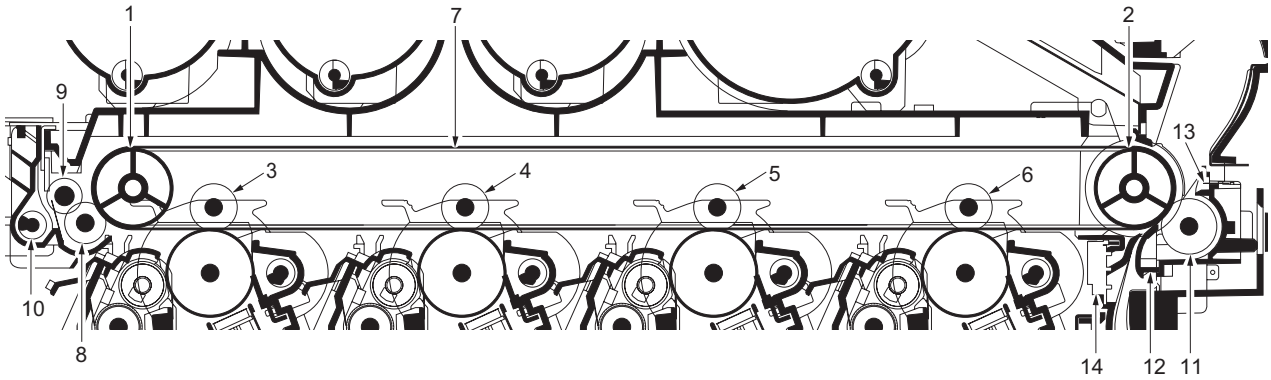

Figure 2-1-16 Transfer/separation section

(1) Tension roller
(2) Drive roller
(3) Primary transfer roller M
(4) Primary transfer roller C
(5) Primary transfer roller Y
(6) Primary transfer roller K
(7) Transfer belt
(8) Cleaning fur brush
(9) Cleaning roller
(10) Cleaning screw
(11) Secondary transfer roller
(12) Paper chute
(13) Separation needle
(14) Left ID sensor/Right ID sensor

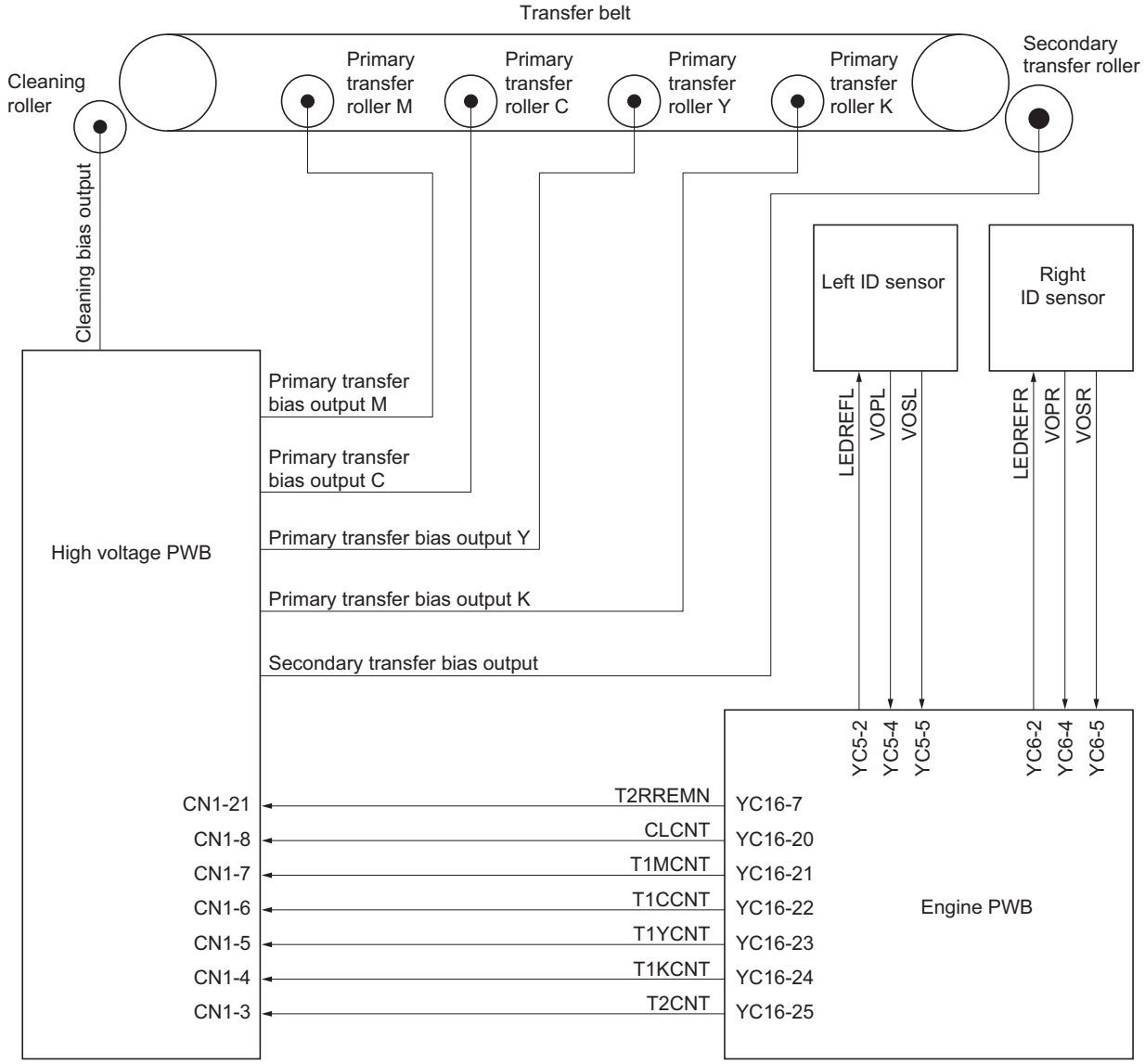

Figure 2-1-17 Transfer/separation section block diagram

2-1-6 Fuser section

The paper sent from the transfer/separation section is interleaved between the heat roller and the press roller. The heat roller is heated by the fuser heater lamp, and the toner is fused by heat and pressure and fixed onto the paper because the press roller is pressed by the fuser press spring. The surface temperature of heat roller is detected by the fuser thermistor and controlled by the engine PWB. If the fuser section shows extremely high temperature, the power line will be shut off and the fuser heater lamp is forced to turn off.

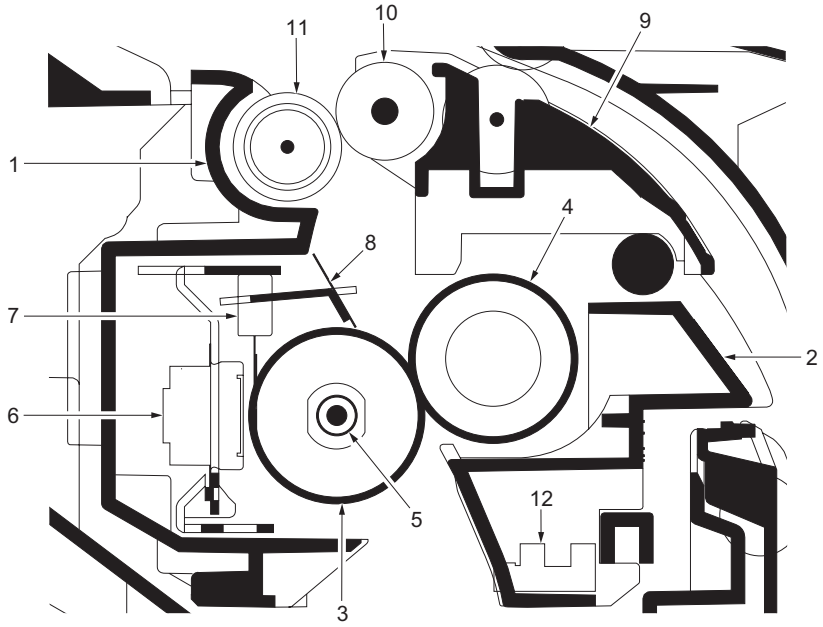

Figure 2-1-18 Fuser section

(1)	Upper fuser frame	(7)	Fuser thermistor
(2)	Lower fuser frame	(8)	Separators
(3)	Heat roller	(9)	Paper exit guide
(4)	Press roller	(10)	Paper exit roller
(5)	Fuser heater lamp	(11)	Paper exit pulley
(6)	Fuser thermal cutout	(12)	Envelope switch

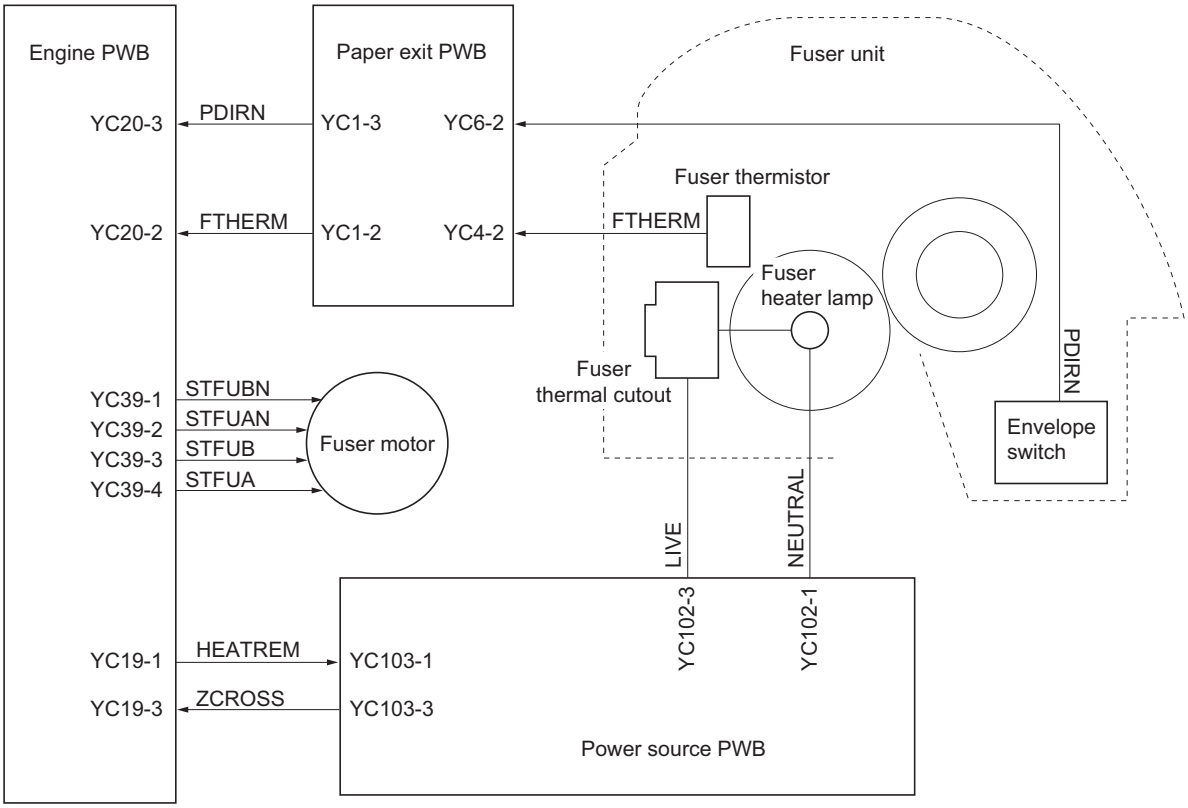

Figure 2-1-19 Fuser section block diagram

2-1-7 Paper exit/feed shift section

The paper exit/feedshift section consists of the conveying path which sends the paper that has passed the fuser section to the top tray or the duplex section. The conveying path is switched by the change guide activated by the duplex solenoid.

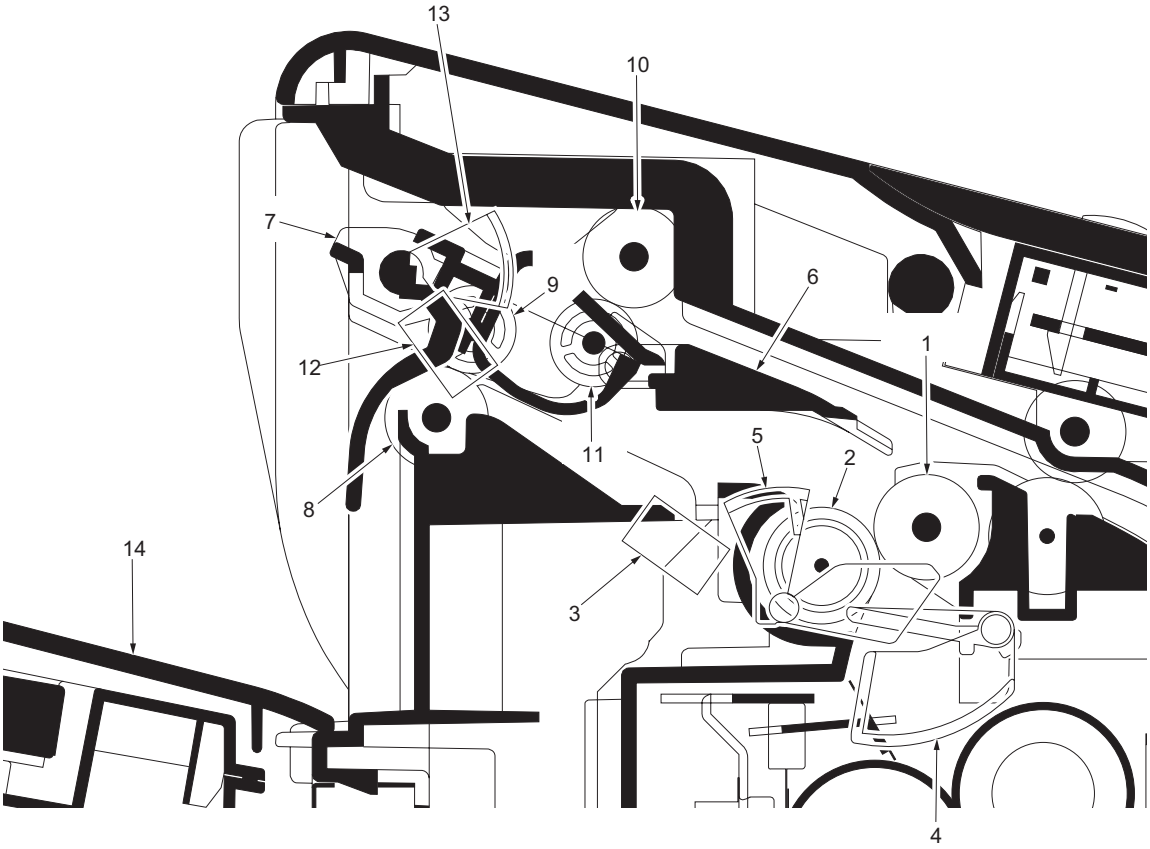

Figure 2-1-20 Paper exit/feed shift section

(1)	Paper exit roller	(8)	FD roller
(2)	Paper exit pulley	(9)	Middle pulley
(3)	Paper exit sensor	(10)	Switchback roller
(4)	Actuator (paper exit sensor)	(11)	Middle pulley
(5)	Actuator (paper exit sensor)	(12)	Paper full sensor
(6)	Change guide	(13)	Actuator (paper full sensor)
(7)	Paper exit upper guide	(14)	Top tray

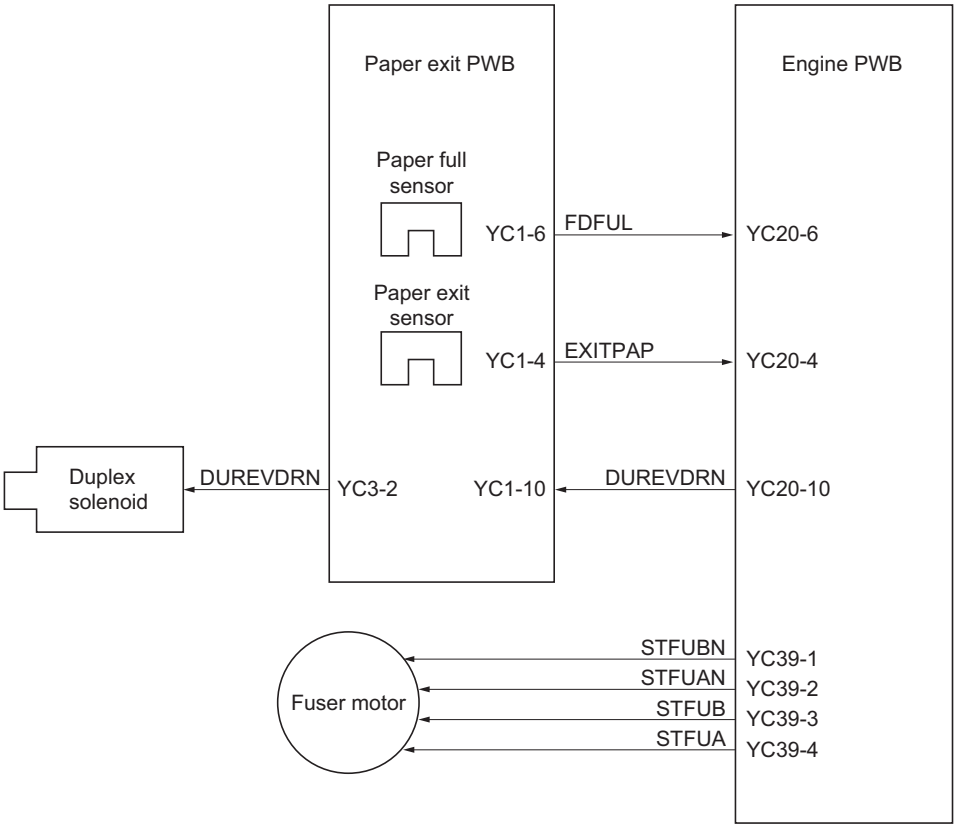

Figure 2-1-21 Paper exit section block diagram

2-1-8 Duplex/conveying section

The duplex/conveying section consists of conveying path which sends the paper sent from the eject section to the paper feed/conveying section when duplex printing.

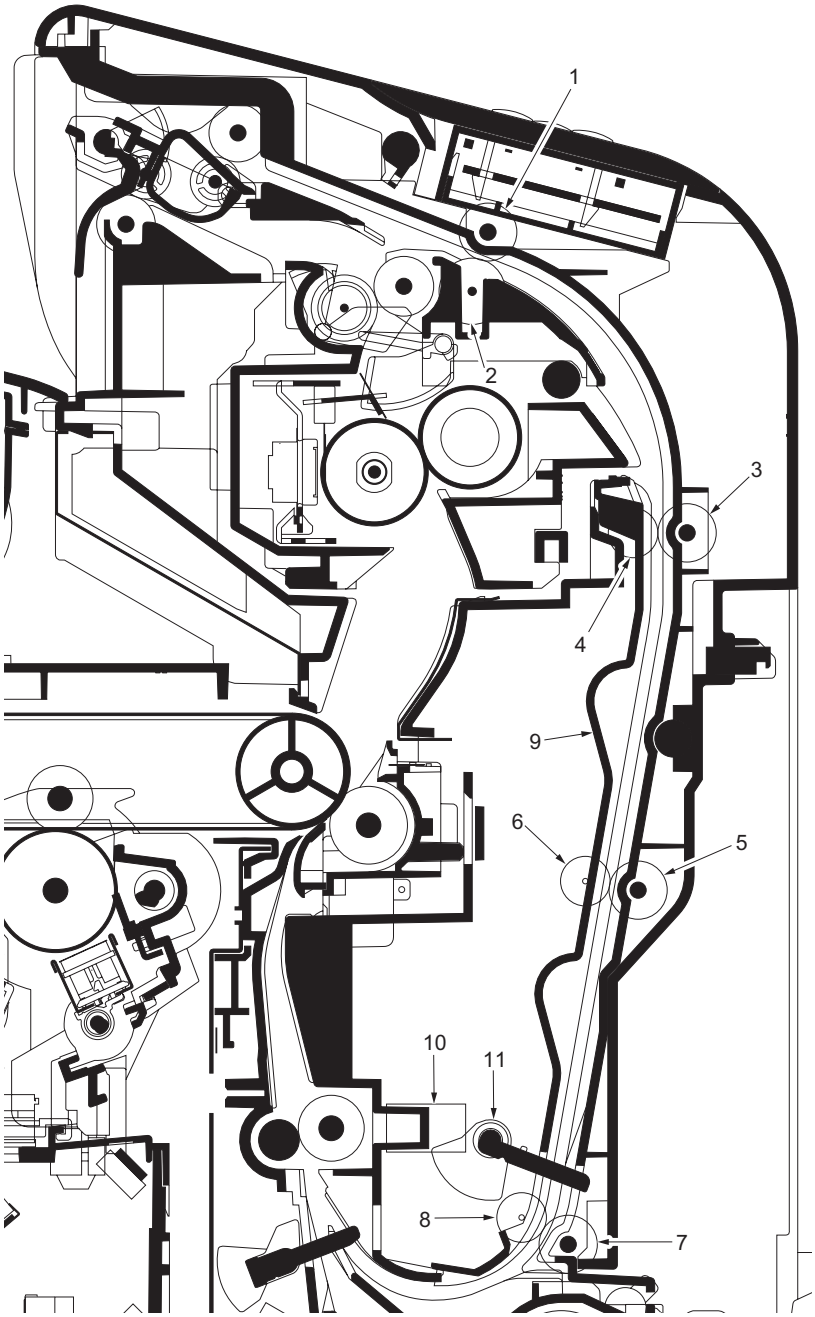

Figure 2-1-22 Duplex/conveying section

(1) Duplex roller 1
(2) Paper exit pulley
(3) Duplex roller 2
(4) Duplex pulley
(5) Duplex roller 3
(6) Duplex pulley
(7) Duplex feed roller
(8) Duplex pulley
(9) Duplex feed guide
(10) Duplex conveying sensor
(11) Actuator (duplex conveying sensor)

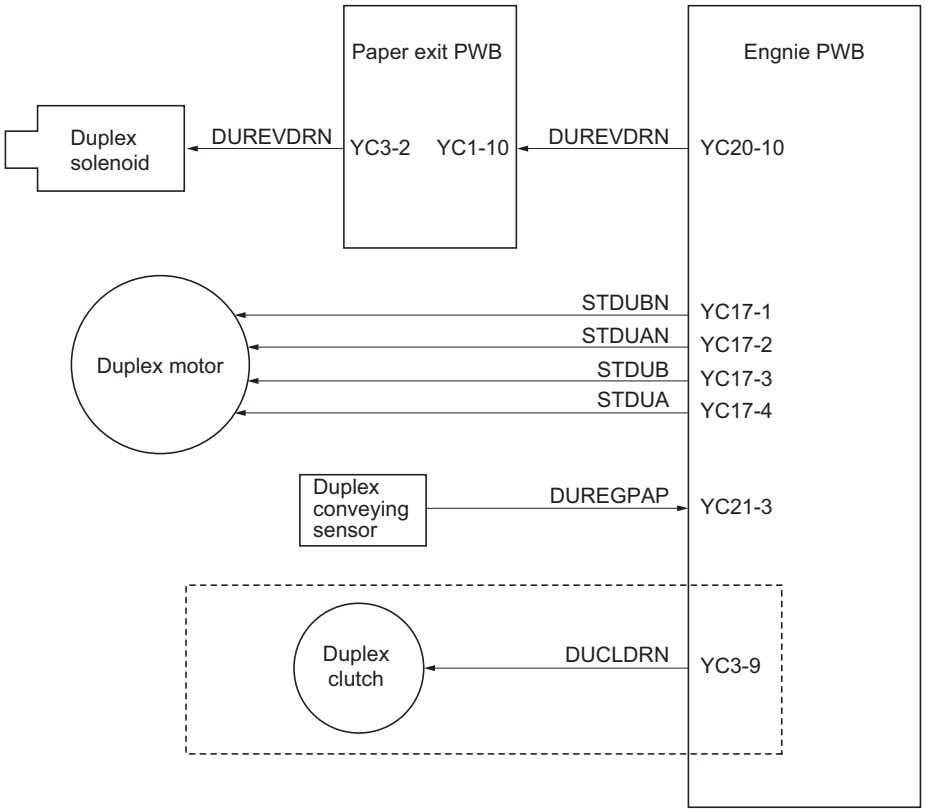

Figure 2-1-23 Duplex/paper conveying section block diagram

2-2-1 Electrical parts layout

(1) PWBs

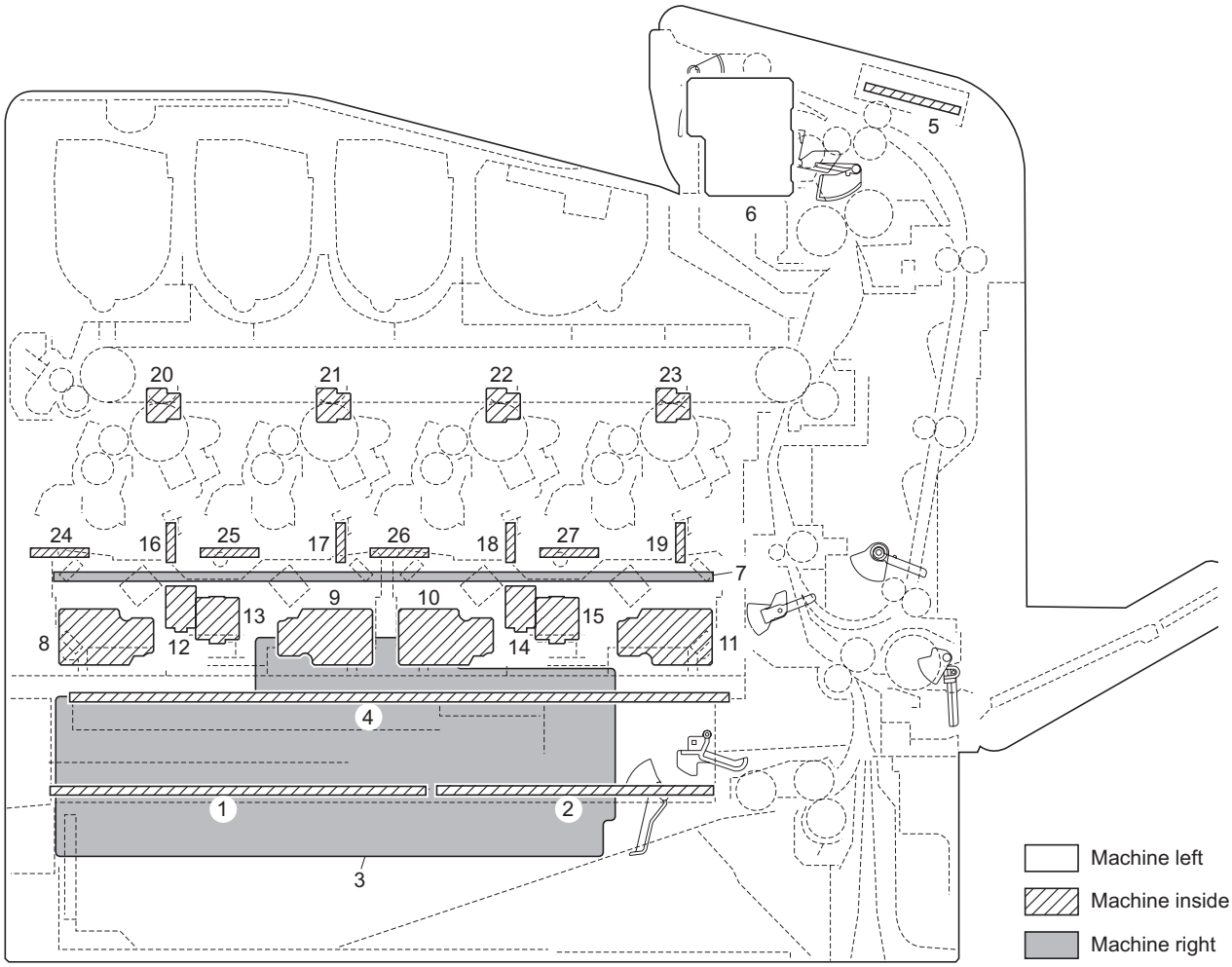

Figure 2-2-1 PWBs

1. Main PWB ..... Controls the software such as the print data processing and provides the interface with computers.
2. Engine PWB ..... Controls printer hardware such as high voltage/bias output control, paper conveying system control, and fuser temperature control, etc.
3. Power source PWB ..... After full-wave rectification of AC power source input, switching for converting to 24 V DC for output. Controls the fuser heater lamp.
4. High voltage PWB ..... Generates main charging, developing bias, transfer bias and cleaning bias.
5. Operation panel PWB ..... Controls the LCD display. Consists the LCD display, LED indicators and key switches.
6. Paper exit PWB ..... Interconnects the engine PWB and the electrical parts (paper exit section).
7. Drum relay PWB ..... Interconnects the engine PWB and the drum units/developing units.
8. APC PWB M ..... Generates and controls the laser beam. (magenta)
9. APC PWB C ..... Generates and controls the laser beam. (cyan)
10. APC PWB Y ..... Generates and controls the laser beam. (yellow)
11. APC PWB K ..... Generates and controls the laser beam. (black)
12. PD PWB M ..... Controls horizontal synchronizing timing of laser beam. (magenta)
13. PD PWB C ..... Controls horizontal synchronizing timing of laser beam. (cyan)
14. PD PWB Y ..... Controls horizontal synchronizing timing of laser beam. (yellow)

15. PD PWB K ..... Controls horizontal synchronizing timing of laser beam. (black)
16. Drum PWB M ..... Relays wirings from electrical components on the drum unit M. Drum individual information in EEPROM* storage.
17. Drum PWB C ..... Relays wirings from electrical components on the drum unit C. Drum individual information in EEPROM* storage.
18. Drum PWB Y..... Relays wirings from electrical components on the drum unit Y. Drum individual information in EEPROM* storage.
19. Drum PWB K..... Relays wirings from electrical components on the drum unit K. Drum individual information in EEPROM* storage.
20. Zener PWB M ..... Adjusts the drum surface potential. (Magenta)
21. Zener PWB C..... Adjusts the drum surface potential. (Cyan)
22. Zener PWB Y ..... Adjusts the drum surface potential. (Yellow)
23. Zener PWB K ..... Adjusts the drum surface potential. (Black)
24. Developing PWB M..... Relays wirings from electrical components on the developing unit M.
25. Developing PWB C ..... Relays wirings from electrical components on the developing unit C.
26. Developing PWB Y ..... Relays wirings from electrical components on the developing unit Y.
27. Developing PWB K ..... Relays wirings from electrical components on the developing unit K.

*: 21/23 ppm (500-sheet) model and 26/28 (500-sheet) model only

(2) Switches and sensors

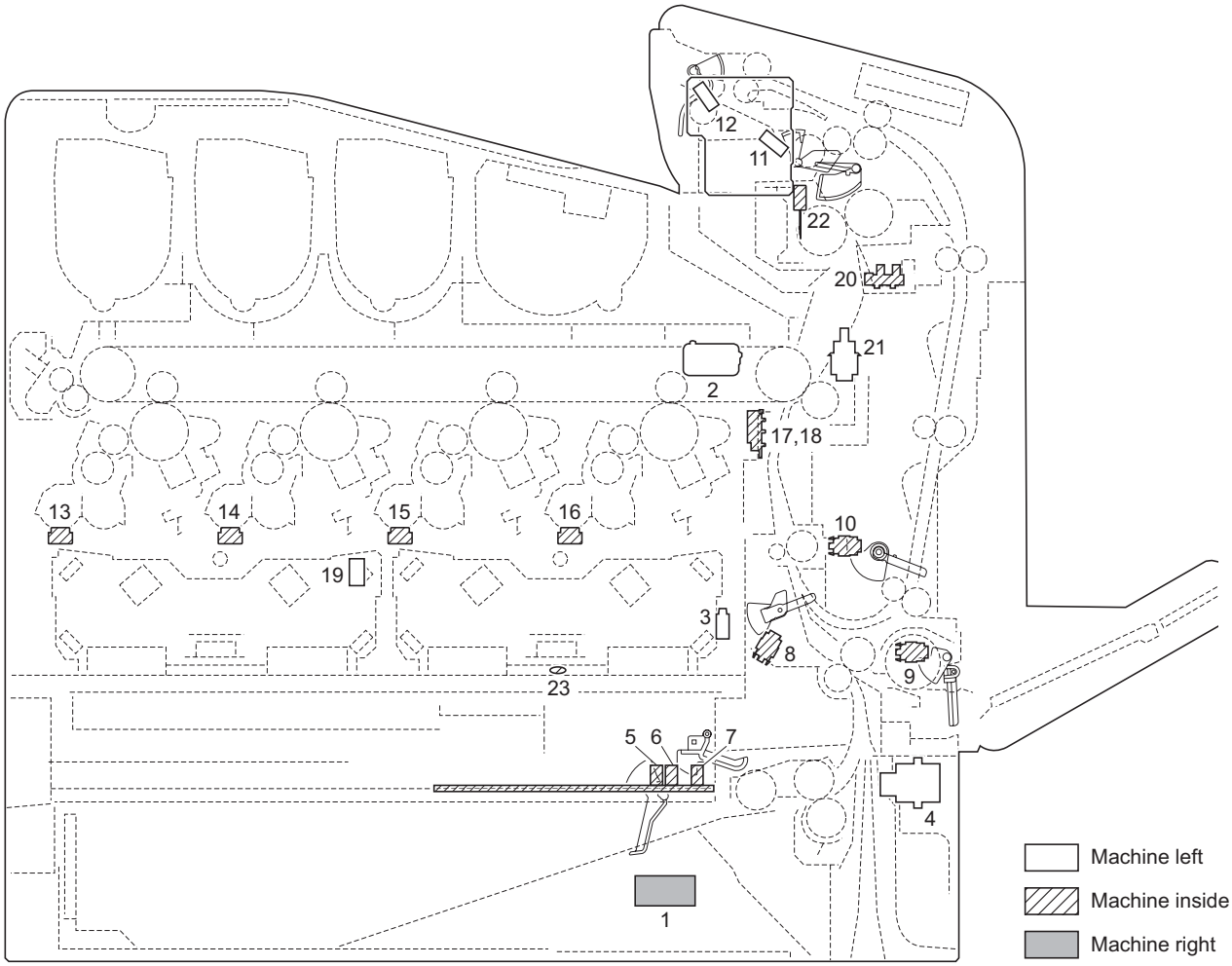

Figure 2-2-2 Switches and sensors

1. Power switch ..... Turns ON/OFF the AC power source.
2. Interlock switch ..... Shuts off 24 V DC power line when the top cover and front cover are opened.
3. Left cover switch ..... Shuts off 24 V DC power line when the left cover is opened.
4. Cassette size switch ..... Detects the paper size dial setting of the paper setting dial.
5. Paper sensor 1..... Detects the presence of paper in the cassette.
6. Paper sensor 2..... Detects the presence of paper in the cassette.
7. Lift limit sensor ..... Detects activation of upper limit of the bottom plate in the cassette.
8. Registration sensor ..... Detects the timing of primary paper feed.
9. MP tray sensor..... Detects the presence of paper on the MP tray.
10. Duplex conveying sensor..... Detects paper jam in the duplex section.
11. Paper exit sensor..... Detects paper jam in the fuser/paper exit section.
12. Paper full sensor..... Detects the paper full in the top tray.
13. Toner sensor M ..... Detects the toner density in the developing unit M.
14. Toner sensor C..... Detects the toner density in the developing unit C.
15. Toner sensor Y..... Detects the toner density in the developing unit Y.
16. Toner sensor K..... Detects the toner density in the developing unit K.
17. Right ID sensor ..... Measures image density for color calibration.
18. Left ID sensor..... Measures image density for color calibration.
19. Waste toner full sensor ..... Detects the waste toner box being full.
20. Envelope switch ..... Detects the envelope mode setting.

21. Front cover open/close switch ..... Detects open/close front cover.
22. Fuser thermistor..... Measures the heat roller temperature.
23. Polygon motor thermistor..... Measures the polygon motor YK temperature.

(3) Motors

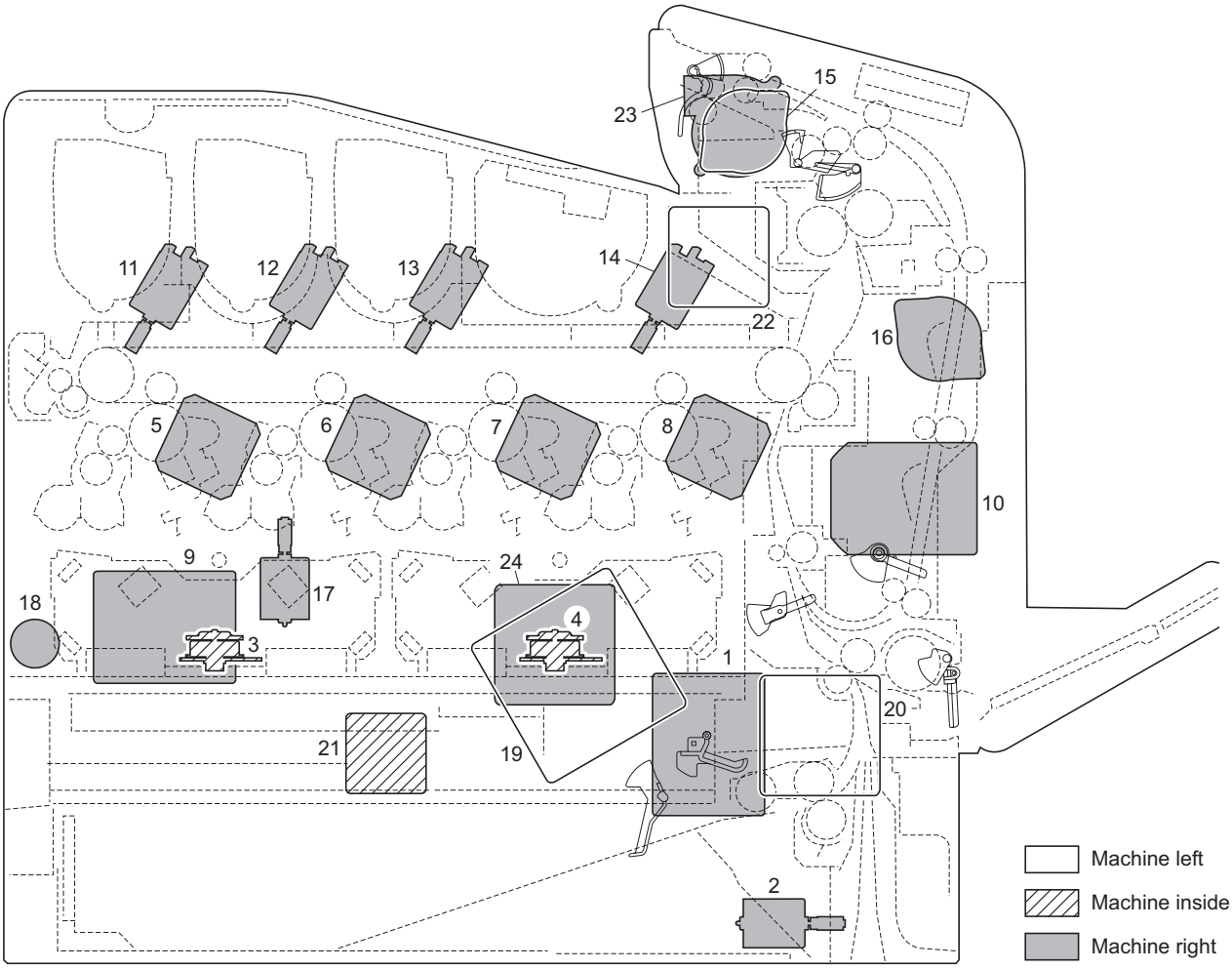

Figure 2-2-3 Motors

1. Paper feed motor ..... Drives the paper feed section.
2. Lift motor ..... Operates the bottom plate in the cassette.
3. Polygon motor MC ..... Drives the polygon mirror.
4. Polygon motor YK ..... Drives the polygon mirror.
5. Drum motor M ..... Drives drum unit M.
6. Drum motor C ..... Drives drum unit C.
7. Drum motor Y ..... Drives drum unit Y.
8. Drum motor K ..... Drives drum unit K.
9. Developing motor MCY ..... Drives developing unit M, C and Y.
10. Developing motor K ..... Drives developing unit K.
11. Toner motor M ..... Replenishes the developing unit M with toner.
12. Toner motor C ..... Replenishes the developing unit C with toner.
13. Toner motor Y ..... Replenishes the developing unit Y with toner.
14. Toner motor K ..... Replenishes the developing unit K with toner.
15. Fuser motor ..... Drives fuser section and paper exit section.
16. Duplex motor ..... Drives duplex section.
17. Main charger cleaning motor ..... Drives main charger wire cleaning system.
18. LSU cleaning motor ..... Drives LSU dust shield glass cleaning system.
19. Developing fan motor 1 ..... Cools the image formation section, engine PWB, main PWB and high voltage PWB.
20. Developing fan motor 2 ..... Cools the image formation section, engine PWB, main PWB and high voltage PWB.

21. Power source fan motor..... Cools the power source PWB.
22. Fuser fan motor 1..... Cools the fuser section.
23. Fuser fan motor 2..... Cools the fuser section.
24. Ozone fan motor ..... The exhaust gas of ozone.

(4) Other electrical components

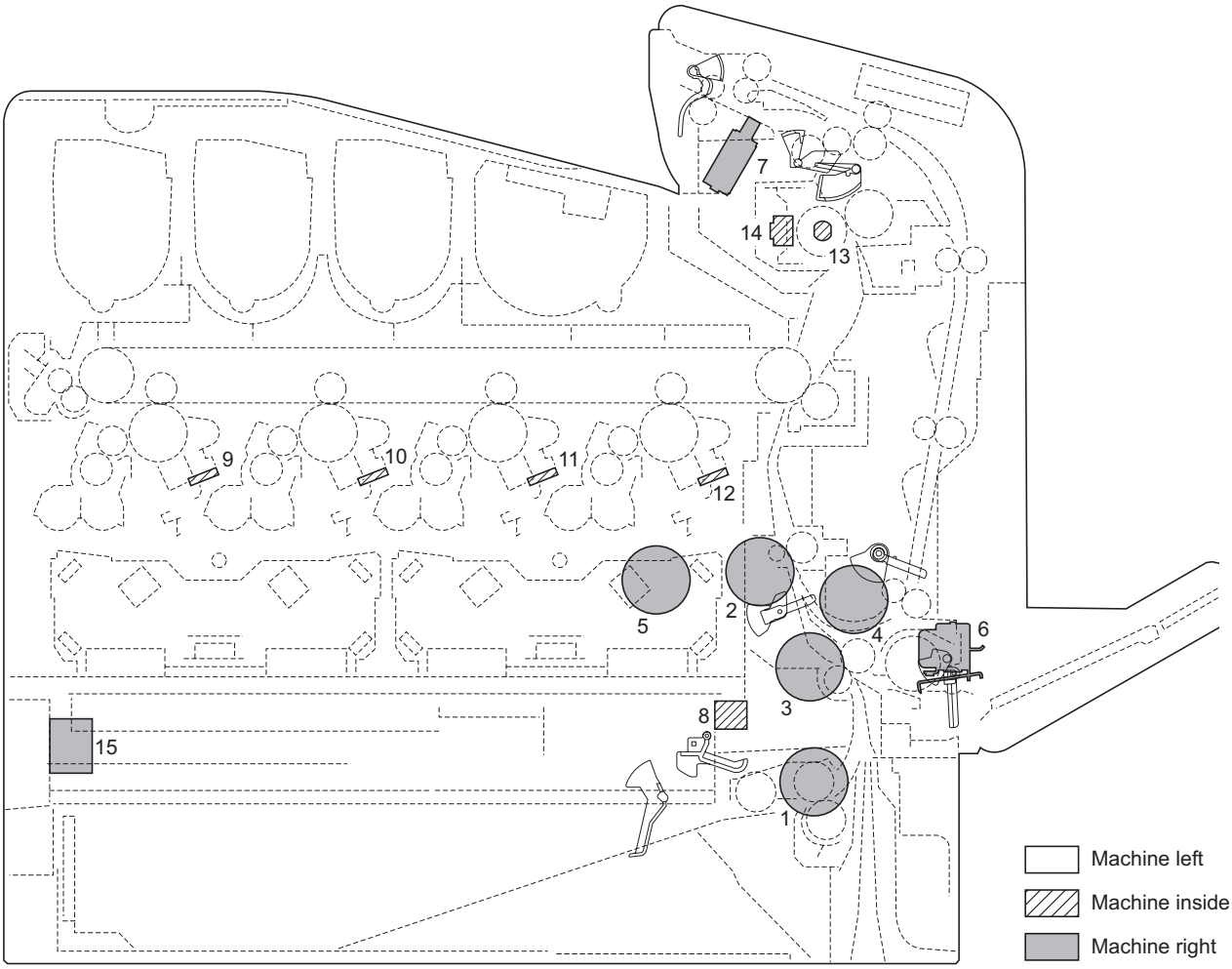

Figure 2-2-4 Other electrical components

1. Paper feed clutch ..... Controls the paper cassette paper feed.
2. Registration clutch ..... Controls the secondary paper feed.
3. Intermediate clutch..... Controls the paper conveying at the conveying section.
4. Duplex clutch ..... Controls the paper conveying at the duplex section.
5. Developing clutch..... Detaches the drive transmission of developing units other than developing unit K at the time of B/W printing.
6. MP paper feed solenoid ..... Controls the MPF bottom plate of the MP tray.
7. Duplex solenoid ..... Operates the change guide.
8. ID solenoid ..... Operates the ID sensors cleaning system.
9. Eraser lamp M..... Eliminates the residual electrostatic charge on the drum. (Magenta)
10. Eraser lamp C ..... Eliminates the residual electrostatic charge on the drum. (Cyan)
11. Eraser lamp Y ..... Eliminates the residual electrostatic charge on the drum. (Yellow)
12. Eraser lamp K ..... Eliminates the residual electrostatic charge on the drum. (Black)
13. Fuser heater lamp..... Heats the heat roller.
14. Fuser thermal cutout ..... Shuts off the power source to the fuser heater lamp when the heat roller reaches extremely high temperature.
15. AC inlet ..... Connects the AC power source.

This page is intentionally left blank.

2-3-1 Power source PWB

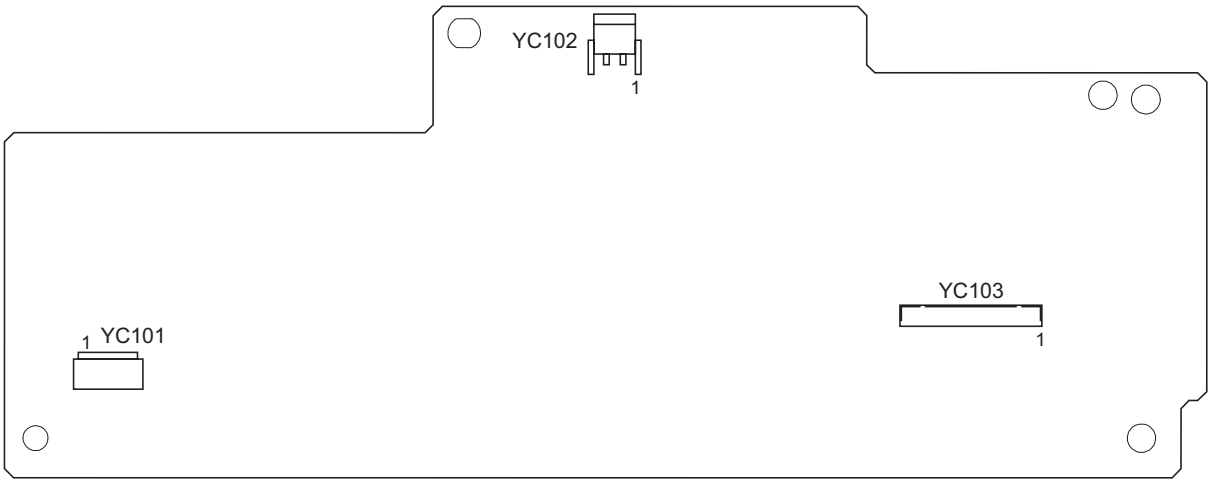

Figure 2-3-1 Power source PWB silk-screen diagram

Connector	Pin	Signal	I/O	Voltage	Description
YC101	1	LIVE	I	120 V AC 220 - 240 V AC	AC power input
Connected to the AC inlet and power switch.	2	NEUTRAL	I	120 V AC 220 - 240 V AC	AC power input
YC102	1	NEUTRAL	O	120/0 V AC 220 - 240/0 V AC	Fuser heater lamp: On/Off
Connected to the fuser heater lamp.	2	N.C.	-	-	Not used
	3	LIVE	O	120 V AC 220 - 240 V AC	AC power output
YC103	1	HEATREM	I	24 V DC	Fuser heater lamp: On/Off
Connected to the engine PWB.	2	N.C.	-	-	Not used
	3	ZCROSS	O	0/3.3 V DC (pulse)	Zero-cross signal
	4	SLEEPN	I	0/24 V DC	Sleep mode signal: On/Off
	5	+24V3	I	24 V DC	24 V DC power source
	6	GND	-	-	Ground
	7	GND	-	-	Ground
	8	GND	-	-	Ground
	9	GND	-	-	Ground
	10	+24V1	O	24 V DC	24 V DC power source
	11	+24V1	O	24 V DC	24 V DC power source
	12	+24V1	O	24 V DC	24 V DC power source
	13	+24V1	O	24 V DC	24 V DC power source

2-3-2 Engine PWB

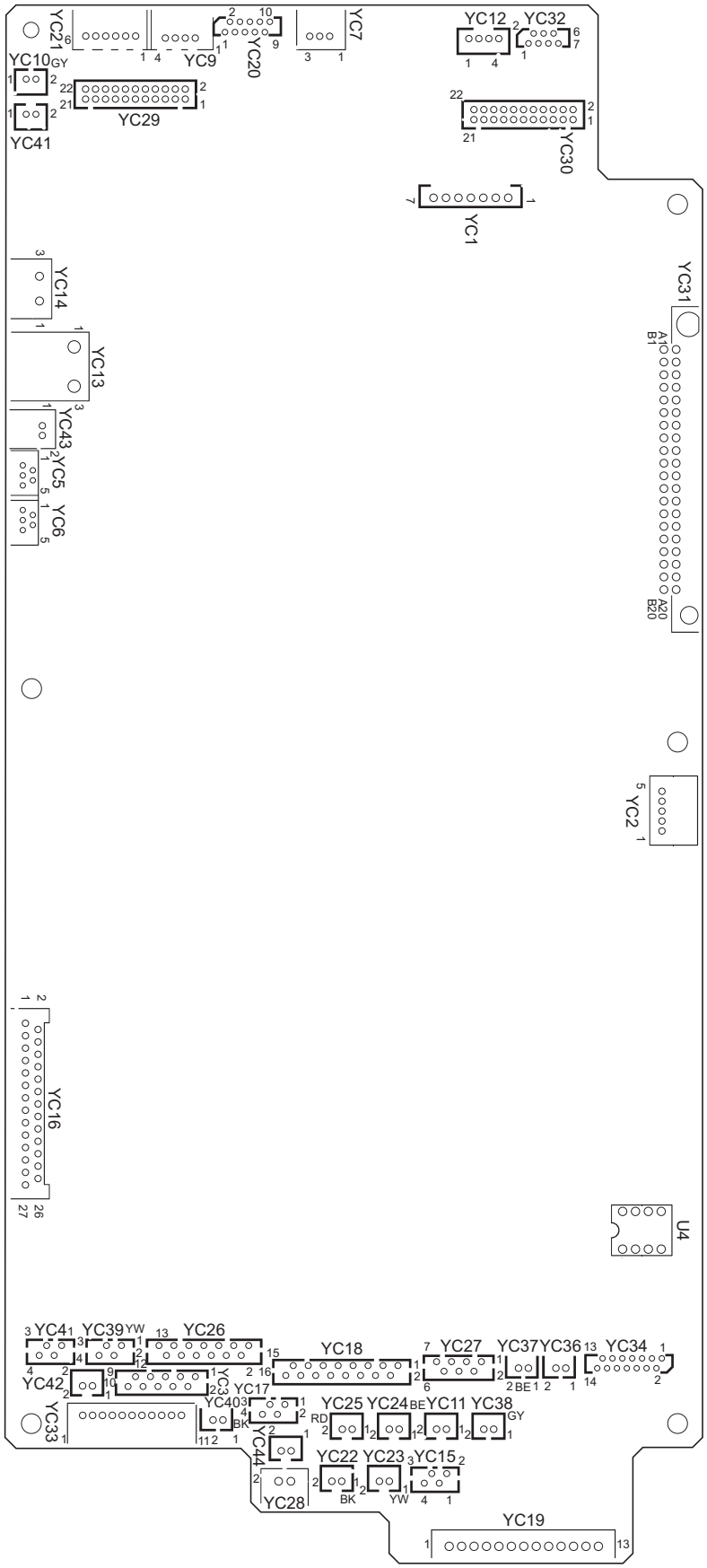

Figure 2-3-2 Engine PWB silk-screen diagram

Connector	Pin	Signal	I/O	Voltage	Description
YC3	1	FEMOTRDYN	I	0/3.3 V DC	Paper feed motor ready signal
Connected to the paper feed motor, intermediate clutch and duplex clutch	2	SPEEDSEL	O	0/3.3 V DC	Paper feed motor speed switch signal
	3	FEMOTCLK	O	0/3.3 V DC (pulse)	Paper feed motor clock signal
	4	FEMOTREN	O	0/3.3 V DC	Paper feed motor: On/Off
	5	GND	-	-	Ground
	6	+24V3	O	24 V DC	24 V DC power source
	7	MIDCLDRN	O	0/24 V DC	Intermediate clutch: On/Off
	8	+24V3	O	24 V DC	24 V DC power source
	9	DUCLDRN	O	0/24 V DC	Duplex clutch: On/Off
	10	+24V3	O	24 V DC	24 V DC power source
YC4	1	STFEBN	O	0/24 V DC (pulse)	Paper feed motor drive control signal (_B)
Connected to the paper feed motor	2	STFEAN	O	0/24 V DC (pulse)	Paper feed motor drive control signal (_A)
	3	STFEB	O	0/24 V DC (pulse)	Paper feed motor drive control signal (B)
	4	STFEA	O	0/24 V DC (pulse)	Paper feed motor drive control signal (A)
YC5	1	+5V1	O	5 V DC	5 V DC power source
Connected to the left ID sensor	2	LEDREFL	O	Analog	Left ID sensor control signal
	3	GND	-	-	Ground
	4	VOPL	I	Analog	Left ID sensor detection signal
	5	VOSL	I	Analog	Left ID sensor detection signal
YC6	1	+5V1	O	5 V DC	5 V DC power source
Connected to the right ID sensor	2	LEDREFR	O	Analog	Right ID sensor control signal
	3	GND	-	-	Ground
	4	VOPR	I	Analog	Right ID sensor detection signal
	5	VOSR	I	Analog	Right ID sensor detection signal
YC7	1	+3.3V2	O	3.3 V DC	3.3 V DC power source
Connected to the registration sensor	2	GND	-	-	Ground
	3	REGPAP	I	0/3.3 V DC	Registration sensor: On/Off
YC9	1	CAS2	I	0/3.3 V DC	Cassette size switch (SW2): On/Off
Connected to the cassette size switch	2	CAS1	I	0/3.3 V DC	Cassette size switch (SW1): On/Off
	3	COM	-	-	Ground
	4	CAS0	I	0/3.3 V DC	Cassette size switch (SW0): On/Off
YC10	1	+24V1	O	24 V DC	24 V DC power source
Connected to the developing fan motor 1	2	DLPFANDRN	O	0/12/24 V DC	Developing fan motor 1: Full speed/Half speed/Off
YC11	1	+24V1	O	24 V DC	24 V DC power source
Connected to the ozone fan motor	2	OZFANDRN	O	0/12/24 V DC	Ozone fan motor: Full speed/Half speed/Off
YC12	1	LEDA	O	5 V DC	5 V DC power source
Connected to the waste toner full sensor	2	LEDK	O	0/5 V DC (pulse)	Waste toner full sensor (emitter)
	3	PTRE	I	Analog	Waste toner full sensor (receiver)
	4	PTRC	O	5 V DC	5 V DC power source

Connector	Pin	Signal	I/O	Voltage	Description
YC13	1	+24V1	O	24 V DC	24 V DC power source
Connected to the inter-lock switch	2	N.C.	-	-	Not used
	3	+24V2	I	24/0 V DC	24 V DC power source Interlock switch: On/Off
YC14	1	+24V3	O	24 V DC	24 V DC power source
Connected to the left cover switch	2	N.C.	-	-	Not used
	3	+24V4	I	24/0 V DC	24 V DC power source Left cover switch: On/Off
YC16	1	GND	-	-	Ground
Connected to the high voltage PWB	2	GND	-	-	Ground
	3	HVCLKK	O	0/3.3 V DC (pulse)	Developing bias clock signal (Black)
	4	HVCLKY	O	0/3.3 V DC (pulse)	Developing bias clock signal (Yellow)
	5	HVCLKC	O	0/3.3 V DC (pulse)	Developing bias clock signal (Cyan)
	6	HVCLKM	O	0/3.3 V DC (pulse)	Developing bias clock signal (Magenta)
	7	T2RREMN	O	0/3.3 V DC (pulse)	Secondary transfer bias reverse signal
	8	MKCNT	O	PWM	Main charger high voltage control voltage (Black)
	9	BKSCNT	O	PWM	Developing sleeve bias control voltage (Black)
	10	BKMCNT	O	PWM	Developing magnet bias control voltage (Black)
	11	MYCNT	O	PWM	Main charger high voltage control voltage (Yellow)
	12	BYSCNT	O	PWM	Developing sleeve bias control voltage (Yellow)
	13	BYMCNT	O	PWM	Developing magnet bias control voltage (Yellow)
	14	MCCNT	O	PWM	Main charger high voltage control voltage (Cyan)
	15	BCSCNT	O	PWM	Developing sleeve bias control voltage (Cyan)
	16	BCMCNT	O	PWM	Developing magnet bias control voltage (Cyan)
	17	MMCNT	O	PWM	Main charger high voltage control voltage (Magenta)
	18	BMSCNT	O	PWM	Developing sleeve bias control voltage (Magenta)
	19	BMMCNT	O	PWM	Developing magnet bias control voltage (Magenta)
	20	CLCNT	O	PWM	Cleaning bias control voltage
	21	T1MCNT	O	PWM	Primary transfer bias control voltage (Magenta)
	22	T1CCNT	O	PWM	Primary transfer bias control voltage (Cyan)
	23	T1YCNT	O	PWM	Primary transfer bias control voltage (Yellow)
	24	T1KCNT	O	PWM	Primary transfer bias control voltage (Black)
	25	T2CNT	O	PWM	Secondary transfer bias control voltage
	26	+24V4	O	24 V DC	24 V DC power source
	27	+24V4	O	24 V DC	24 V DC power source
YC17	1	STDUBN	O	0/24 V DC (pulse)	Duplex motor drive control signal (_B)
Connected to the duplex motor	2	STDUAN	O	0/24 V DC (pulse)	Duplex motor drive control signal (_A)
	3	STDUB	O	0/24 V DC (pulse)	Duplex motor drive control signal (B)
	4	STDUA	O	0/24 V DC (pulse)	Duplex motor drive control signal (A)

Connector	Pin	Signal	I/O	Voltage	Description
YC18	1	STMBN	O	0/24 V DC (pulse)	Drum motor M drive control signal (_B)
Connected to the drum motor M/C/Y/K	2	STMAN	O	0/24 V DC (pulse)	Drum motor M drive control signal (_A)
	3	STMB	O	0/24 V DC (pulse)	Drum motor M drive control signal (B)
	4	STMA	O	0/24 V DC (pulse)	Drum motor M drive control signal (A)
	5	STCBN	O	0/24 V DC (pulse)	Drum motor C drive control signal (_B)
	6	STCAN	O	0/24 V DC (pulse)	Drum motor C drive control signal (_A)
	7	STCB	O	0/24 V DC (pulse)	Drum motor C drive control signal (B)
	8	STCA	O	0/24 V DC (pulse)	Drum motor C drive control signal (A)
	9	STYBN	O	0/24 V DC (pulse)	Drum motor Y drive control signal (_B)
	10	STYAN	O	0/24 V DC (pulse)	Drum motor Y drive control signal (_A)
	11	STYB	O	0/24 V DC (pulse)	Drum motor Y drive control signal (B)
	12	STYA	O	0/24 V DC (pulse)	Drum motor Y drive control signal (A)
	13	STKBN	O	0/24 V DC (pulse)	Drum motor K drive control signal (_B)
	14	STKAN	O	0/24 V DC (pulse)	Drum motor K drive control signal (_A)
	15	STKB	O	0/24 V DC (pulse)	Drum motor K drive control signal (B)
	16	STKA	O	0/24 V DC (pulse)	Drum motor K drive control signal (A)
YC19	1	HEATREM	O	24 V DC	Fuser heater lamp: On/Off
Connected to the power source PWB	2	N.C.	-	-	Not used
	3	ZCROSS	I	0/3.3 V DC (pulse)	Zero-cross signal
	4	SLEEPN	O	0/24 V DC	Sleep mode signal: On/Off
	5	+24V3	O	24 V DC	24 V DC power source
	6	GND	-	-	Ground
	7	GND	-	-	Ground
	8	GND	-	-	Ground
	9	GND	-	-	Ground
	10	+24V1	I	24 V DC	24 V DC power source
	11	+24V1	i	24 V DC	24 V DC power source
	12	+24V1	I	24 V DC	24 V DC power source
	13	+24V1	I	24 V DC	24 V DC power source
YC20	1	+3.3V2	O	3.3 V DC	3.3 V DC power source
Connected to the paper exit PWB	2	FTHERM	I	Analog	Fuser thermistor detection voltage
	3	PDIRN	I	0/3.3 V DC	Envelope switch: On/Off
	4	EXITPAP	I	0/3.3 V DC	Paper exit sensor: On/Off
	5	GND	-	-	Ground
	6	FDFUL	I	0/3.3 V DC	Paper full sensor: On/Off
	7	FEEDOPN	I	0/3.3 V DC	Front cover open/close switch: On/Off
	8	FUFANDRN	O	0/12/24 V DC	Fuser fan motor 1: Full speed/Half speed/Off
	9	+24V1	O	24 V DC	24 V DC power source
	10	DUREVDRN	O	0/24 V DC	Duplex solenoid: On/Off
YC21	1	+3.3V2	O	3.3 V DC	3.3 V DC power source
Connected to the duplex conveying sensor and MP tray sensor	2	GND	-	-	Ground
	3	DUREGPAP	I	0/3.3 V DC	Duplex conveying sensor: On/Off
	4	+3.3V2	O	3.3 V DC	3.3 V DC power source
	5	GND	-	-	Ground
	6	MPHANDS	I	0/3.3 V DC	MP tray sensor: On/Off
YC22	1	+24V3	O	24 V DC	24 V DC power source
Connected to the toner motor K	2	TNMKDRN	O	0/24 V DC	Toner motor K: On/Off

Connector	Pin	Signal	I/O	Voltage	Description
YC23	1	+24V3	O	24 V DC	24 V DC power source
Connected to the toner motor Y	2	TNMYDRN	O	0/24 V DC	Toner motor Y: On/Off
YC24	1	+24V3	O	24 V DC	24 V DC power source
Connected to the toner motor C	2	TNMCDRN	O	0/24 V DC	Toner motor C: On/Off
YC25	1	+24V3	O	24 V DC	24 V DC power source
Connected to the toner motor M	2	TNMMDRN	O	0/24 V DC	Toner motor M: On/Off
YC26	1	DLPCLDRN	O	0/24 V DC	Developing clutch K: On/Off
Connected to the developing clutch K, developing motor K, Registration clutch and paper feed clutch	2	+24V3	O	24 V DC	24 V DC power source
	3	MOTKREV	O	0/3.3 V DC	Developing motor K drive switch signal
	4	DLPMOTKRDYN	I	0/3.3 V DC	Developing motor K ready signal
	5	SPEEDSEL	O	0/3.3 V DC	Developing motor K speed selection signal
	6	DLPMOTKCLK	O	0/3.3 V DC (pulse)	Developing motor K clock signal
	7	DLPMOTKREN	O	0/3.3 V DC	Developing motor K: On/Off
	8	GND	-	-	Ground
	9	+24V3	O	24 V DC	24 V DC power source
	10	REGCLDRN	O	0/24 V DC	Registration clutch: On/Off
	11	+24V3	O	24 V DC	24 V DC power source
	12	FEDCLDRN	O	0/24 V DC	Paper feed clutch: On/Off
	13	+24V3	O	24 V DC	24 V DC power source
YC27	1	MOTREV	O	0/3.3 V DC	Developing motor MCY drive switch signal
Connected to the developing motor MCY	2	DLPMOTRDYN	I	0/3.3 V DC	Developing motor MCY ready signal
	3	SPEEDSEL	O	0/3.3 V DC	Developing motor MCY speed switch signal
	4	DLPMOTCLK	O	0/3.3 V DC (pulse)	Developing motor MCY clock signal
	5	DLPMOTREN	O	0/3.3 V DC	Developing motor MCY: On/Off
	6	GND	-	-	Ground
	7	+24V3	O	24 V DC	24 V DC power source
YC28	1	LMOTDRN	O	0/24 V DC	Lift motor: On/Off
Connected to the lift motor	2	GND	-	-	Ground

Connector	Pin	Signal	I/O	Voltage	Description
YC29	1	+3.3V1	O	3.3 V DC	3.3 V DC power source
Connected to the APC PWB Y, APC PWB K and polygon motor YK	2	LONBYN	O	0/3.3 V DC	APC PWB Y sample/hold signal
	3	ENBYN	O	0/3.3 V DC	APC PWB Y laser enable signal
	4	VDOYP	O	LVDS	APC PWB Y video data signal (+)
	5	VDOYN	O	LVDS	APC PWB Y video data signal (-)
	6	GND	-	-	Ground
	7	VREFY	O	Analog	APC PWB Y control signal
	8	THERMY	I	Analog	LSU thermistor detection voltage
	9	PDYN	I	0/3.3 V DC (pulse)	Horizontal synchronization signal
	10	+3.3V1	O	3.3 V DC	3.3 V DC power source
	11	LONBKN	O	0/3.3 V DC	APC PWB K sample/hold signal
	12	ENBKN	O	0/3.3 V DC	APC PWB K laser enable signal
	13	VDOKP	O	LVDS	APC PWB K video data signal (+)
	14	VDOKN	O	LVDS	APC PWB K video data signal (-)
	15	GND	-	-	Ground
	16	VREFK	O	Analog	APC PWB K control signal
	17	PDKN	I	0/3.3 V DC (pulse)	Horizontal synchronization signal
	18	POLCLK1	O	0/3.3 V DC (pulse)	Polygon motor YK clock signal
	19	POLRDYN1	I	0/3.3 V DC	Polygon motor YK ready signal
	20	POLONN1	O	0/3.3 V DC	Polygon motor YK: On/Off
	21	GND	-	-	Ground
	22	+24V3	O	24 V DC	24 V DC power source
YC30	1	+3.3V1	O	3.3 V DC	3.3 V DC power source
Connected to the APC PWB M, APC PWB C and polygon motor MC	2	LONBMN	O	0/3.3 V DC	APC PWB M sample/hold signal
	3	ENBMN	O	0/3.3 V DC	APC PWB M laser enable signal
	4	VDOMP	O	LVDS	APC PWB M video data signal (+)
	5	VDOMN	O	LVDS	APC PWB M video data signal (-)
	6	GND	-	-	Ground
	7	VREFM	O	Analog	APC PWB M control signal
	8	THERMM	I	Analog	LSU thermistor detection voltage
	9	PDMN	I	0/3.3 V DC (pulse)	Horizontal synchronization signal
	10	+3.3V1	O	3.3 V DC	3.3 V DC power source
	11	LONBCN	O	0/3.3 V DC	APC PWB C sample/hold signal
	12	ENBCN	O	0/3.3 V DC	APC PWB C laser enable signal
	13	VDOCP	O	LVDS	APC PWB C video data signal (+)
	14	VDOCN	O	LVDS	APC PWB C video data signal (-)
	15	GND	-	-	Ground
	16	VREFC	O	Analog	APC PWB C control signal
	17	PDCN	I	0/3.3 V DC (pulse)	Horizontal synchronization signal
	18	POLCLK0	O	0/3.3 V DC (pulse)	Polygon motor MC clock signal
	19	POLRDYN0	I	0/3.3 V DC	Polygon motor MC ready signal
	20	POLONN0	O	0/3.3 V DC	Polygon motor MC: On/Off
	21	GND	-	-	Ground
	22	+24V3	O	24 V DC	24 V DC power source

Connector	Pin	Signal	I/O	Voltage	Description
YC31	A1	VDOMP	I	LVDS	APC PWB M video data signal (+)
Connected to the main PWB	A2	VDOMN	I	LVDS	APC PWB M video data signal (-)
	A3	VDOYP	I	LVDS	APC PWB Y video data signal (+)
	A4	VDOYN	I	LVDS	APC PWB Y video data signal (-)
	A5	GND	-	-	Ground
	A6	PDMN	O	0/3.3 V DC (pulse)	Horizontal synchronization signal
	A7	PDYN	O	0/3.3 V DC (pulse)	Horizontal synchronization signal
	A8	GND	-	-	Ground
	A9	FPDATA	I/O	0/3.3 V DC	Operation panel PWB data signal
	A10	FPDIR	I	0/3.3 V DC	Operation panel PWB communication direct signal
	A11	+3.3V1	O	3.3 V DC	3.3 V DC power source
	A12	+3.3V1	O	3.3 V DC	3.3 V DC power source
	A13	SO	O	0/3.3 V DC (pulse)	Main PWB serial communication data signal
	A14	SDIR	O	0/3.3 V DC	Main PWB communication direction signal
	A15	EGIRN	O	0/3.3 V DC	Engine interrupt signal
	A16	+5V1	O	5 V DC	5 V DC power source
	A17	+5V1	O	5 V DC	5 V DC power source
	A18	+5V1	O	5 V DC	5 V DC power source
	A19	RESETN	O	0/3.3 V DC	Main PWB reset signal
	A20	GND	-	-	Ground
	B1	VDOCP	I	LVDS	APC PWB C video data signal (+)
	B2	VDOCN	I	LVDS	APC PWB C video data signal (-)
	B3	VDOCP	I	LVDS	APC PWB K video data signal (+)
	B4	VDOCN	I	LVDS	APC PWB K video data signal (-)
	B5	GND	-	-	Ground
	B6	PDCN	O	0/3.3 V DC (pulse)	Horizontal synchronization signal
	B7	PDKN	O	0/3.3 V DC (pulse)	Horizontal synchronization signal
	B8	GND	-	-	Ground
	B9	N.C.	-	-	Not used
	B10	FPCLK	I	0/3.3 V DC	Operation panel PWB clock signal
	B11	FPRSTN	I	0/3.3 V DC	Operation panel reset signal
	B12	+3.3V1	O	3.3 V DC	3.3 V DC power source
	B13	SI	O	0/3.3 V DC (pulse)	Main PWB serial communication data signal
	B14	SCLN	O	0/3.3 V DC (pulse)	Main PWB clock signal
	B15	SBSY	O	0/3.3 V DC	Main PWB busy signal
	B16	VSYNC	O	0/3.3 V DC	PD mask control signal
	B17	EEDAT	I/O	0/3.3 V DC (pulse)	EEPROM data signal
	B18	EECLK	O	0/3.3 V DC (pulse)	EEPROM clock signal
	B19	GND	-	-	Ground
	B20	GND	-	-	Ground
YC32	1	GND	-	-	Ground
Connected to the operation panel PWB	2	FPCLK	O	0/3.3 V DC (pulse)	Operation panel PWB clock signal
	3	FPDIR	O	0/3.3 V DC	Operation panel PWB communication direct signal
	4	FPDATA	I/O	0/3.3 V DC	Operation panel PWB data signal
	5	+3.3V1	O	3.3 V DC	3.3 V DC power source
	6	FPRSTN	O	0/3.3 V DC	Operation panel reset signal
	7	+5V	O	5 V DC	5 V DC power source

Connector	Pin	Signal	I/O	Voltage	Description
YC33	1	GND	-	-	Ground
Connected to the option paper feeder	2	OPSCLK	O	0/5 V DC (pulse)	Paper feeder clock signal
	3	OPRDYN	I	0/5 V DC	Paper feeder ready signal
	4	OPSDI	I	0/5 V DC (pulse)	Paper feeder serial communication data signal
	5	OPSDO	O	0/5 V DC (pulse)	Paper feeder serial communication data signal
	6	OP5V	O	5 V DC	5 V DC power source
	7	GND	-	-	Ground
	8	OPSEL0	O	0/5 V DC	Paper feeder selection signal
	9	OPSEL1	O	0/5 V DC	Paper feeder selection signal
	10	OPSEL2	O	0/5 V DC	Paper feeder selection signal
	11	OP24	O	24 V DC	24 V DC power source
YC34	1	ERASEMDR	O	0/24 V DC	Eraser lamp M: On/Off
Connected to the drum relay signal	2	TNSENM	I	Analog	Toner sensor M detection voltage
	3	ERASECDR	O	0/24 V DC	Eraser lamp C: On/Off
	4	TNSENC	I	Analog	Toner sensor C detection voltage
	5	ERASEYDR	O	0/24 V DC	Eraser lamp Y: On/Off
	6	TNSENY	I	Analog	Toner sensor Y detection voltage
	7	EECLK	O	0/3.3 V DC (pulse)	EEPROM clock signal
	8	GND	-	-	Ground
	9	EEDATA	I/O	0/3.3 V DC (pulse)	EEPROM data signal
	10	+3.3V1	O	3.3 V DC	3.3 V DC power source
	11	ERASEKDR	O	0/24 V DC	Eraser lamp K: On/Off
	12	+3.3V2	O	3.3 V DC	3.3 V DC power source
	13	TNSENK	I	Analog	Toner sensor K detection voltage
	14	DLPTHERM	I	Analog	Developing thermistor detection voltage
YC36	1	MCHMOTA	O	24/0 V DC	Main charger cleaning motor: Fwd/Stop/(Rev)
Connected to the main charger cleaning motor	2	MCHMOTB	O	24/0 V DC	Main charger cleaning motor: Rev/Stop/(Fwd)
YC37	1	LSUMOTA	O	24/0 V DC	LSU cleaning motor: Fwd/Stop/(Rev)
Connected to the LSU cleaning motor	2	LSUMOTB	O	24/0 V DC	LSU cleaning motor: Rev/Stop/(Fwd)
YC38	1	+24V1	O	24 V DC	24 V DC power source
Connected to the power source fan motor	2	PSFANDRN	O	0/12/24 V DC	Power source fan motor: Full speed/Half speed/Off
YC39	1	STFUBN	O	0/24 V DC (pulse)	Fuser motor drive control signal (_B)
Connected to the fuser motor	2	STFUAN	O	0/24 V DC (pulse)	Fuser motor drive control signal (_A)
	3	STFUB	O	0/24 V DC (pulse)	Fuser motor drive control signal (B)
	4	STFUA	O	0/24 V DC (pulse)	Fuser motor drive control signal (A)
YC40	1	+24V3	O	24 V DC	24 V DC power source
Connected to the MP paper feed solenoid	2	MPSOLDRN	O	0/24 V DC	MP paper feed solenoid: On/Off

Connector	Pin	Signal	I/O	Voltage	Description
YC41	1	+24V1	O	24 V DC	24 V DC power source
Connected to the developing fan motor 2	2	DLPFANDRN	O	0/12/24 V DC	Developing fan motor 2: Full speed/Half speed/Off
YC43	1	+24V3	O	24 V DC	24 V DC power source
Connected to the ID solenoid	2	IDSOLDRN	O	0/24 V DC	ID solenoid: On/Off
YC44	1	+24V3	O	24 V DC	24 V DC power source
Connected to the fuser fan motor 2	2	SUBFANDRN	O	0/12/24 V DC	Fuser fan motor 2: Full speed/Half speed/Off

2-3-3 Drum relay PWB

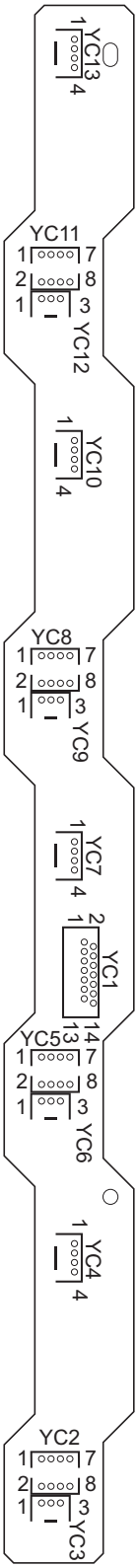

Figure 2-3-3 Drum relay PWB silk-screen diagram

Connector	Pin	Signal	I/O	Voltage	Description
YC1	1	ERASEMDR	I	0/24 V DC	Eraser lamp M: On/Off
Connected to the engine PWB.	2	TNSENM	O	Analog	Toner sensor M detection voltage
	3	ERASECDR	I	0/24 V DC	Eraser lamp C: On/Off
	4	TNSENC	O	Analog	Toner sensor C detection voltage
	5	ERASEYDR	I	0/24 V DC	Eraser lamp Y: On/Off
	6	TNSENY	O	Analog	Toner sensor Y detection voltage
	7	EECLK	I	0/3.3 V DC (pulse)	EEPROM clock signal
	8	GND	-	-	Ground
	9	EEDATA	I/O	0/3.3 V DC (pulse)	EEPROM data signal
	10	+3.3V1	I	3.3 V DC	3.3 V DC power source
	11	ERASEKDR	I	0/24 V DC	Eraser lamp K: On/Off
	12	+3.3V2	I	3.3 V DC	3.3 V DC power source
	13	TNSENK	O	Analog	Toner sensor K detection voltage
	14	DLPTHERM	O	Analog	Developing thermistor detection voltage
YC2	1	EEDATA	I/O	0/3.3 V DC (pulse)	EEPROM data signal
Connected to the drum PWB K	2	ERASEDR	O	0/24 V DC	Eraser lamp K: On/Off
	3	EECLK	O	0/3.3 V DC (pulse)	EEPROM clock signal
	4	GND	-	-	Ground
	5	+3.3V1	O	3.3 V DC	3.3 V DC power source
	6	N.C.	-	-	Not used
	7	DA1	O	0/3.3 V DC	Data address signal
	8	DA0	O	0/3.3 V DC	Data address signal
YC3	1	GND	-	-	Ground
Connected to the drum PWB K	2	ERASEKDR	O	0/24 V DC	Eraser lamp K: On/Off
	3	N.C.	-	-	Not used
YC4	1	GND	-	-	Ground
Connected to the devel-oping PWB K	2	TNSENK	I	Analog	Toner sensor K detection voltage
	3	+3.3V2	O	3.3 V DC	3.3 V DC power source
	4	TH_DLP	I	Analog	Developing thermistor detection voltage
YC5	1	EEDATA	I/O	0/3.3 V DC (pulse)	EEPROM data signal
Connected to the drum PWB Y	2	ERASEDR	O	0/24 V DC	Eraser lamp Y: On/Off
	3	EECLK	O	0/3.3 V DC (pulse)	EEPROM clock signal
	4	GND	-	-	Ground
	5	+3.3V1	O	3.3 V DC	3.3 V DC power source
	6	N.C.	-	-	Not used
	7	DA1	O	0/3.3 V DC	Data address signal
	8	DA0	O	0/3.3 V DC	Data address signal
YC6	1	GND	-	-	Ground
Connected to the drum PWB Y	2	ERASEYDR	O	0/24 V DC	Eraser lamp Y: On/Off
	3	N.C.	-	-	Not used
YC7	1	GND	-	-	Ground
Connected to the drum PWB C	2	TNSENY	I	Analog	Toner sensor Y detection voltage
	3	+3.3V2	O	3.3 V DC	3.3 V DC power source
	4	N.C.	-	-	Not used

Connector	Pin	Signal	I/O	Voltage	Description
YC8	1	EEDATA	I/O	0/3.3 V DC (pulse)	EEPROM data signal
Connected to the drum PWB C	2	ERASEDR	O	0/24 V DC	Eraser lamp C: On/Off
	3	EECLK	O	0/3.3 V DC (pulse)	EEPROM clock signal
	4	GND	-	-	Ground
	5	+3.3V1	O	3.3 V DC	3.3 V DC power source
	6	N.C.	-	-	Not used
	7	DA1	O	0/3.3 V DC	Data address signal
	8	DA0	O	0/3.3 V DC	Data address signal
YC9	1	GND	-	-	Ground
Connected to the drum PWB C	2	ERASECDR	O	0/24 V DC	Eraser lamp C: On/Off
	3	N.C.	-	-	Not used
YC10	1	GND	-	-	Ground
Connected to the devel-oping PWB C	2	TNSENC	I	Analog	Toner sensor C detection voltage
	3	+3.3V2	O	3.3 V DC	3.3 V DC power source
	4	N.C.	-	-	Not used
YC11	1	EEDATA	I/O	0/3.3 V DC (pulse)	EEPROM data signal
Connected to the drum PWB M	2	ERASEDR	O	0/24 V DC	Eraser lamp M: On/Off
	3	EECLK	O	0/3.3 V DC (pulse)	EEPROM clock signal
	4	GND	-	-	Ground
	5	+3.3V1	O	3.3 V DC	3.3 V DC power source
	6	N.C.	-	-	Not used
	7	DA1	O	0/3.3 V DC	Data address signal
	8	DA0	O	0/3.3 V DC	Data address signal
YC12	1	GND	-	-	Ground
Connected to the drum PWB M	2	ERASMCDR	O	0/24 V DC	Eraser lamp M: On/Off
	3	N.C.	-	-	Not used
YC13	1	GND	-	-	Ground
Connected to the devel-oping PWB M	2	TNSENM	I	Analog	Toner sensor M detection voltage
	3	+3.3V2	O	3.3 V DC	3.3 V DC power source
	4	N.C.	-	-	Not used

2-3-4 Paper exit PWB

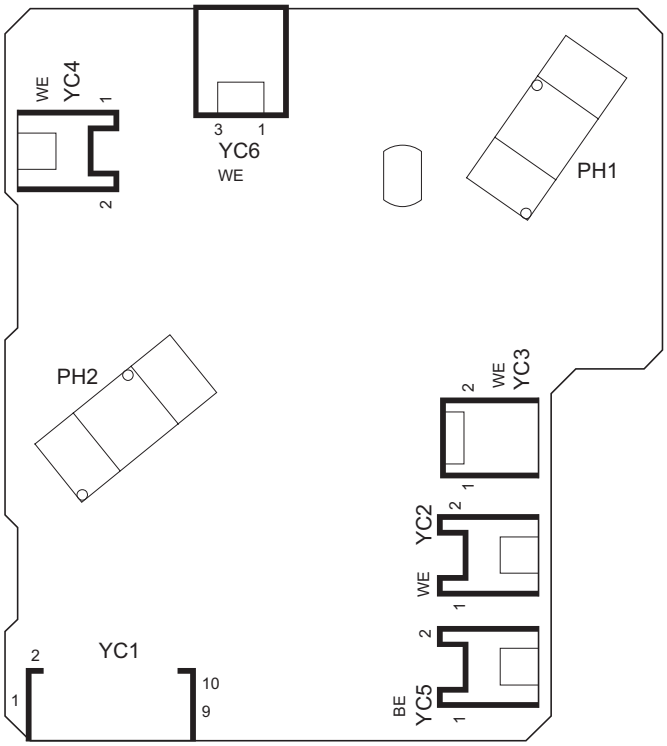

Figure 2-3-4 Paper exit PWB silk-screen diagram

Connector	Pin	Signal	I/O	Voltage	Description
YC1	1	+3.3V2	I	3.3 V DC	3.3 V DC power source
Connected to the engine PWB.	2	FTHERM	O	Analog	Fuser thermistor detection voltage
	3	PDIRN	O	0/3.3 V DC	Envelope switch: On/Off
	4	EXITPAP	O	0/3.3 V DC	Paper exit sensor: On/Off
	5	GND	-	-	Ground
	6	FDFUL	O	0/3.3 V DC	Paper full sensor: On/Off
	7	FEEDOPN	O	0/3.3 V DC	Front cover open/close switch: On/Off
	8	FUFANDRN	I	0/12/24 V DC	Fuser fan motor 1: Full speed/Half speed/Off
	9	+24V1	I	24 V DC	24 V DC power source
	10	DUREVDRN	I	0/24 V DC	Duplex solenoid: On/Off
YC2	1	+24V1	O	24 V DC	24 V DC power source
Connected to the fuser fan motor 1	2	FUFANDRN	O	0/12/24 V DC	Fuser fan motor 1: Full speed/Half speed/Off
YC3	1	+24V1	O	24 V DC	24 V DC power source
Connected to the duplex solenoid	2	DUREVDRN	O	0/24 V DC	Duplex solenoid: On/Off

Connector	Pin	Signal	I/O	Voltage	Description
YC4	1	+3.3V1	O	3.3 V DC	3.3 V DC power source
Connected to the fuser thermistor	2	FTHERM	I	Analog	Fuser thermistor detection voltage
YC5	1	FEEDOPN	I	0/3.3 V DC	Front cover open/close switch: On/Off
Connected to the front cover open/ close switch	2	GND	-	-	Ground
YC6	1	GND	-	-	Ground
Connected to the enve-lope switch	2	PDIRN	I	0/3.3 V DC	Envelope switch: On/Off
	3	+3.3V2	O	3.3 V DC	3.3 V DC power source

This page is intentionally left blank.

2-4-1 Appendixes

(1) Wiring diagram

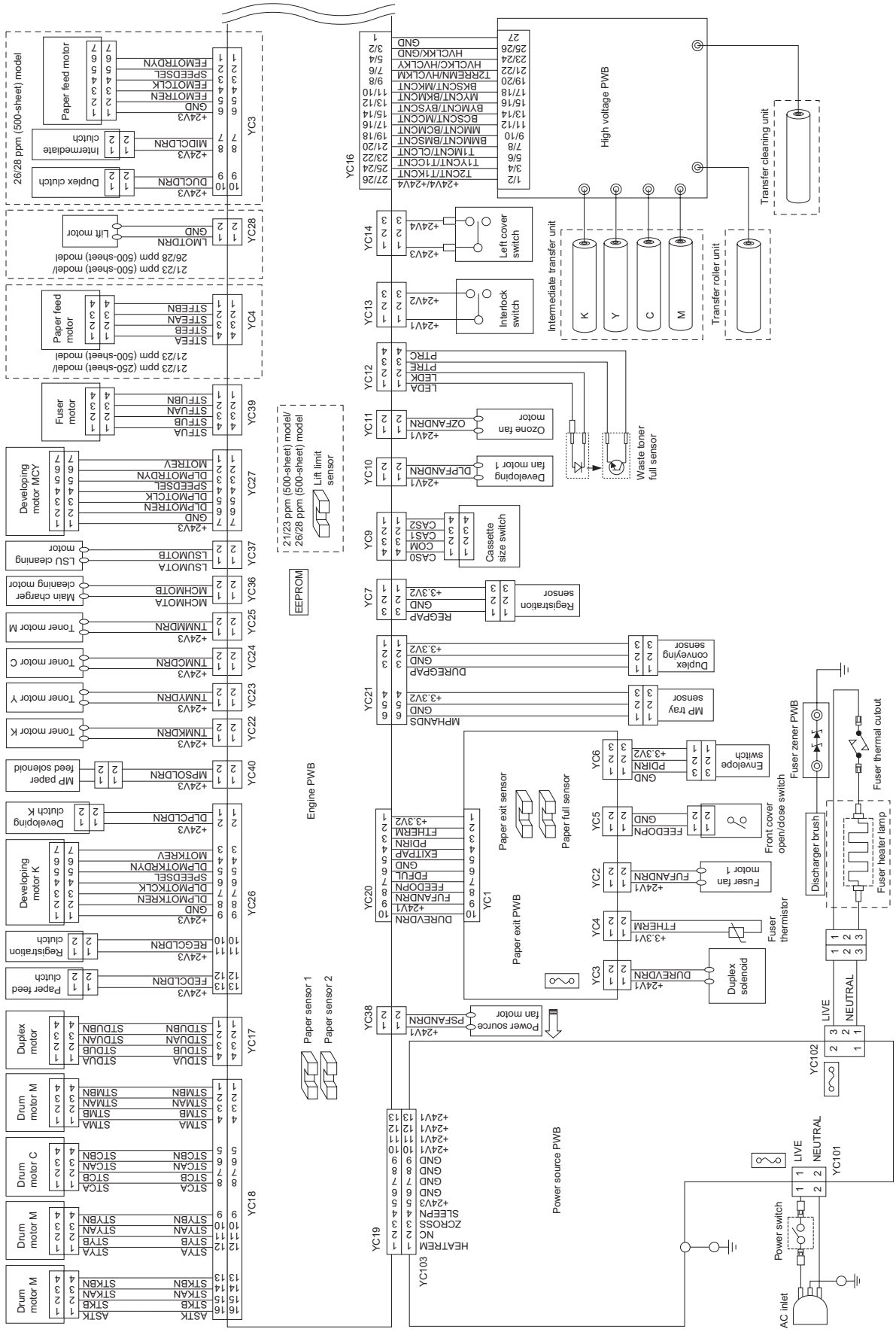

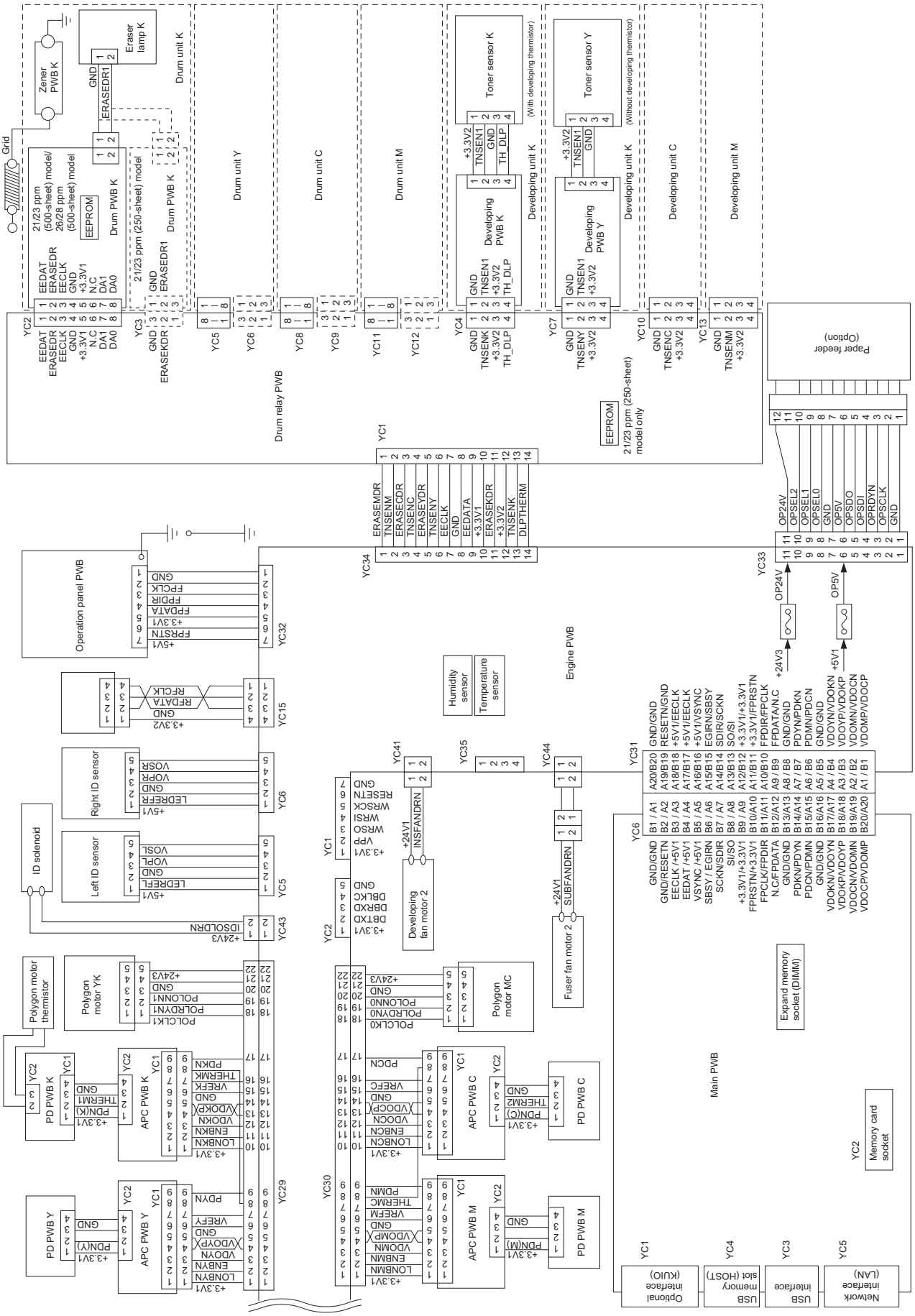
Grid
Zener PWB K
Eraser lamp K
Drum unit K
Drum unit Y
Drum unit C
Drum unit M
Toner sensor K
Toner sensor Y
(With developing thermistor)
(Without developing thermistor)
21/23 ppm (500-sheet) model/ 26/28 ppm (500-sheet) model
21/23 ppm (250-sheet) model
Drum PWB K
Developing PWB K
Developing PWB Y
Developing unit K
Developing unit C
Developing unit M
Drum relay PWB
EEPROM
21/23 ppm (250-sheet) model only
Paper feeder (Option)
Operation panel PWB
Right ID sensor
Left ID sensor
ID solenoid
Humidity sensor
Temperature sensor
Engine PWB
Developing fan motor 2
Fuser fan motor 2
Polygon motor thermistor
Polygon motor YK
Polygon motor MC
PD PWB K
APC PWB K
APC PWB C
PD PWB C
PD PWB Y
APC PWB Y
APC PWB M
PD PWB M
Main PWB
Expand memory socket (DIMM)
Memory card socket
Optional interface (KUIO)
USB memory slot (HOST)
USB interface
Network interface (LAN)

(2) Repetitive defects gauge

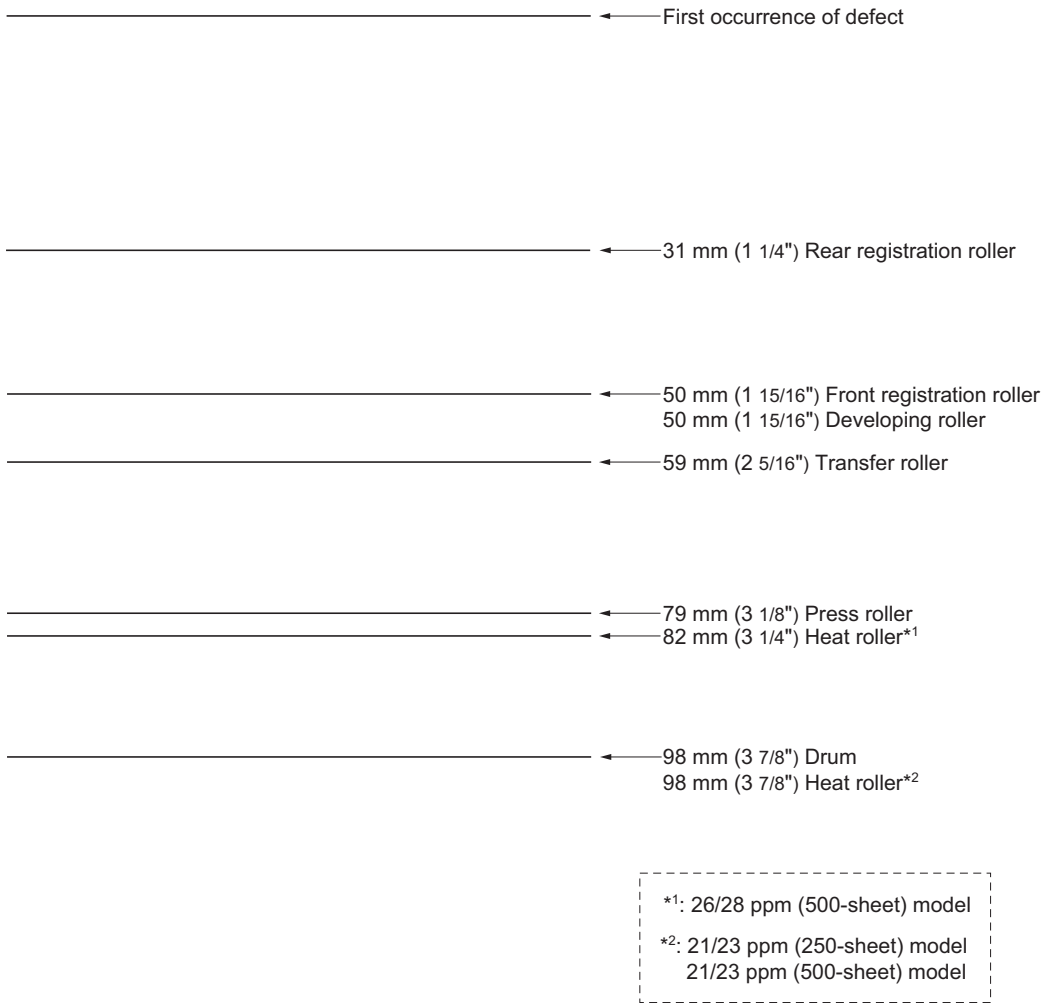

*1: 26/28 ppm (500-sheet) model

*2: 21/23 ppm (250-sheet) model
21/23 ppm (500-sheet) model

(3) Maintenance parts list

220-240 V AC model

Maintenance part name		Part No.	Alternative part No.	Fig. No.	Ref. No.
Name used in service manual	**Name used in parts list**				
Maintenance kit MK-550	MK-550/MAINTENANCE KIT	1702HM3EU0	072HM3EU	15	-
Drum unit	DK-550	302HM93010	2HM93010	-	-
Paper feed roller assembly	HOLDER FEED ASSY SP	302HN94201	2HN94201	-	-
Developing unit Y	DV-560(Y)	302HN93020	2HN93020	-	-
Developing unit K	DV-560(K)	302HN93010	2HN93010	-	-
Developing unit C	DV-560(C)	302HN93030	2HN93030	-	-
Developing unit M	DV-560(M)	302HN93040	2HN93040	-	-
Fuser unit	FK-560(E)	302HN93070	2HN93070	-	-
Intermediate transfer unit	TR-560	302HN93060	2HN93060	-	-
MP paper feed roller	ROLLER M/P ASSY /43487B0027 A4	5AAVR0LL+051	2CL16130	-	-
Retard roller	RETARD ROLLER ASSY	302F909170	2F909170	-	-
Maintenance kit MK-560	MK-560/MAINTENANCE KIT	1702HN3EU0	072HN3EU	15	-
Paper feed roller assembly	HOLDER FEED ASSY SP	302HN94201	2HN94201	-	-
Developing unit Y	DV-560(Y)	302HN93020	2HN93020	-	-
Developing unit K	DV-560(K)	302HN93010	2HN93010	-	-
Developing unit C	DV-560(C)	302HN93030	2HN93030	-	-
Developing unit M	DV-560(M)	302HN93040	2HN93040	-	-
Drum unit	DK-560	302HN93050	2HN93050	-	-
Fuser unit	FK-560(E)	302HN93070	2HN93070	-	-
Intermediate transfer unit	TR-560	302HN93060	2HN93060	-	-
MP paper feed roller	ROLLER M/P ASSY /43487B0027 A4	5AAVR0LL+051	2CL16130	-	-
Retard roller	RETARD ROLLER ASSY	302F909170	2F909170	-	-

120 V AC model

Maintenance part name		Part No.	Alternative part No.	Fig. No.	Ref. No.
Name used in service manual	**Name used in parts list**				
Maintenance kit MK-550	MK-550/MAINTENANCE KIT	1702HM2US0	072HM2US	15	-
Drum unit	DK-550	302HM93010	2HM93010	-	-
Paper feed roller assembly	HOLDER FEED ASSY SP	302HN94201	2HN94201	-	-
Developing unit Y	DV-560 US (Y)	302HN93260	2HN93260	-	-
Developing unit K	DV-560 US (K)	302HN93250	2HN93250	-	-
Developing unit C	DV-560 US (C)	302HN93270	2HN93270	-	-
Developing unit M	DV-560 US (M)	302HN93280	2HN93280	-	-
Fuser unit	FK-560(U)	302HN93080	2HN93080	-	-
Intermediate transfer unit	TR-560	302HN93060	2HN93060	-	-
MP paper feed roller	ROLLER M/P ASSY /43487B0027 A4	5AAVR0LL+051	2CL16130	-	-
Retard roller	RETARD ROLLER ASSY	302F909170	2F909170	-	-
Maintenance kit MK-560	MK-560/MAINTENANCE KIT	1702HN2US0	072HN2US	15	-
Paper feed roller assembly	HOLDER FEED ASSY SP	302HN94201	2HN94201	-	-
Developing unit Y	DV-560 US (Y)	302HN93260	2HN93260	-	-
Developing unit K	DV-560 US (K)	302HN93250	2HN93250	-	-
Developing unit C	DV-560 US (C)	302HN93270	2HN93270	-	-
Developing unit M	DV-560 US (M)	302HN93280	2HN93280	-	-
Drum unit	DK-560	302HN93050	2HN93050	-	-
Fuser unit	FK-560(U)	302HN93080	2HN93080	-	-
Intermediate transfer unit	TR-560	302HN93060	2HN93060	-	-
MP paper feed roller	ROLLER M/P ASSY /43487B0027 A4	5AAVR0LL+051	2CL16130	-	-
Retard roller	RETARD ROLLER ASSY	302F909170	2F909170	-	-

This page is intentionally left blank.

KYOCERA MITA EUROPE B.V.

Hoeksteen 40, 2132 MS Hoofddorp,
The Netherlands
Phone: +31.20.654.0000
Home page: http://www.kyoceramita-europe.com
Email: info@kyoceramita-europe.com

KYOCERA MITA NEDERLAND B.V.

Beechavenue 25, 1119RA Schiphol-Rijk
The Netherlands
Phone: +31.20.58.77.200

KYOCERA MITA (UK) LTD

8 Beacontree Plaza
Gillette Way Reading Berks RG2 0BS,
U.K.
Phone: +44.1189.311.500

KYOCERA MITA ITALIA S.p.A.

Via G. Verdi, 89 / 91, 20063 Cernusco s/N
Milano, Italy
Phone: +39.02.92179.1

S.A. KYOCERA MITA BELGIUM N.V.

Hermesstraat 8A, 1930 Zaventem,
Belgium
Phone: +32.2.720.9270

KYOCERA MITA FRANCE S.A.

Parc Les Algorithmes Saint Aubin
91194 GIF-SUR-YVETTE,
France
Phone: +33.1.6985.2600

KYOCERA MITA ESPAÑA S.A.

Edificio Kyocera, Avda de Manacor No. 2,
28290 Las Matas (Madrid),
Spain
Phone: +34.91.631.8392

KYOCERA MITA FINLAND OY

Kirvesmiehenkatu 4, 00880 Helsinki,
Finland
Phone: +358.9.4780.5200

KYOCERA MITA (SCHWEIZ)

Hohlstrasse 614, 8048 Zürich
Switzerland
Phone: +41.1.908.4949

KYOCERA MITA DEUTSCHLAND GMBH

Otto-Hahn-Str. 12 D-40670 Meerbusch,
Germany
Phone: +49.2159.918.0

KYOCERA MITA GMBH AUSTRIA

Eduard-Kittenberger-Gasse 95,
1230 Wien,
Austria
Phone: +43.1.86338.210

KYOCERA MITA SVENSKA AB

Esbogatan 16B 164 75 Kista,
Sweden
Phone: +46.8.546.55000

KYOCERA MITA NORGE

Postboks 150 Oppsal, NO 0619 Oslo
Olaf Helsetsvei 6, NO 0694 Oslo,
Norway
Phone: +47.22.62.73.00

KYOCERA MITA DANMARK A/S

Ejby Industrivej 1, DK-2600 Glostrup,
Denmark
Phone: +45.5687.1100

KYOCERA MITA PORTUGAL LDA.

Rua do Centro Cultural, 41 (Alvalade) 1700-106 Lisbon,
Portugal
Phone: +351.21.842.9100

KYOCERA MITA SOUTH AFRICA (PTY) LTD.

527 Kyalami Boulevard,
Kyalami Business Park Midrand,
South Africa
Phone: +27.(0)11.540.2600

KYOCERA MITA AMERICA, INC.

Headquarters:
225 Sand Road,
Fairfield, New Jersey 07004-0008,
U.S.A.
Phone: (973) 808-8444

KYOCERA MITA AUSTRALIA PTY. LTD.

Level 3, 6-10 Talavera Road, North Ryde,
N.S.W. 2113 Australia
Phone: (02) 9888-9999

KYOCERA MITA NEW ZEALAND LTD.

1-3 Parkhead Place, Albany
P.O. Box 302 125 NHPC, Auckland,
New Zealand
Phone: (09) 415-4517

KYOCERA MITA (THAILAND) CORP., LTD.

9/209 Ratchada-Prachachem Road,
Bang Sue, Bangkok 10800, Thailand
Phone: (02) 586-0320

KYOCERA MITA SINGAPORE PTE LTD.

121 Genting Lane, 3rd Level,
Singapore 349572
Phone: 67418733

KYOCERA MITA HONG KONG LIMITED

11/F., Mita Centre,
552-566, Castle Peak Road,
Tsuen Wan, New Territories,
Hong Kong
Phone: 24297422

KYOCERA MITA TAIWAN Corporation.

7F-1~2, No.41, Lane 221, Gangchi Rd.
Neihu District, Taipei, Taiwan, 114. R.O.C.
Phone: (02) 87511560

KYOCERA MITA Corporation

2-28, 1-chome, Tamatsukuri, Chuo-ku
Osaka 540-8585, Japan
Phone: (06) 6764-3555
http://www.kyoceramita.com

©2009 KYOCERA MITA Corporation

KYOCERA is a trademark of Kyocera Corporation

Printed in Holland

KYOCERA MITA AMERICA, INC.

Headquarters:
225 Sand Road,
Fairfield, New Jersey 07004-0008
TEL : (973) 808-8444
FAX : (973) 882-6000

New York Branch:
1410 Broadway 23rd floor
New York, NY 10018
TEL : (917) 286-5400
FAX : (917) 286-5402

Northeastern Region:
225 Sand Road,
Fairfield, New Jersey 07004-0008
TEL : (973) 808-8444
FAX : (973) 882-4401

Midwestern Region:
201 Hansen Court Suite 119
Wood Dale, Illinois 60191
TEL : (630) 238-9982
FAX : (630) 238-9487

Western Region:
14101 Alton Parkway,
Irvine, California 92618-7006
TEL : (949) 457-9000
FAX : (949) 457-9119

Southeastern Region:
1500 Oakbrook Drive,
Norcross, Georgia 30093
TEL : (770) 729-9786
FAX : (770) 729-9873

Southwestern Region:
2825 West Story Road,
Irving, Texas 75038-5299
TEL : (972) 550-8987
FAX : (972) 252-9786

National Operation Center
& National Training Center:
2825 West Story Road,
Irving, Texas 75038-5299
TEL : (972) 659-0055
FAX : (972) 570-5816

Latin America Division:
8240 N.W. 52nd. Terrace Dawson Building,
Suite 108 Miami, Florida 33166
TEL : (305) 421-6640
FAX : (305) 421-6666

KYOCERA MITA CANADA, LTD.

6120 Kestrel Road, Mississauga,
Ontario L5T 1S8, Canada
TEL : (905) 670-4425
FAX : (905) 670-8116

KYOCERA MITA MEXICO, S.A. DE C.V.

Av. 16 de Septiembre #407
Col. Santa Inés,
Azcapotzalco México,
D.F. 02130, México
TEL : (55) 5383-2741
FAX : (55) 5383-7804

©2009 KYOCERA MITA Corporation

http://www.kyoceramita.com

KYOCERA is a trademark of Kyocera Corporation

Printed in U.S.A.